FACILITY ENGINEERING ASSOCIATES

Improving the Way You Manage Facilities

Report of

2012 Facilities Condition Assessment & Building Data Collection Project

For

Wyoming School Facilities Department

WSFD RFQ PS 0625
FEA Project # R05.2011.000700
September 28, 2012

Facility Engineering Associates
445 Union Blvd, Suite 120

Lakewood, CO 80228
303.984.7300
www.feapc.com

FACILITY ENGINEERING ASSOCIATES, P.C.
445 UNION BLVD. SUITE #120
LAKEWOOD, CO 80228

303.984-7300
303.984-7300 FAX

September 28, 2012

Mr. Stan Hobbs
Wyoming School Facilities Department
1103 Old Town Lane, Suite #1
Cheyenne, Wyoming 82002

RE: Submittal of Draft Report

FOR: 2012 Facilities Condition Assessment and Building Data Collection
RFQ PS 0625
FEA Project R05.2011.000700

Dear Mr. Hobbs:

Facility Engineering Associates, P.C. (FEA) is pleased to present this draft report of our findings associated with the 2012 Facilities Condition Assessment and Building Data Collection Project. This report summarizes the work performed and the data collected as part of the project including the supporting methodologies. The data for both the condition assessment evaluations and the space measurement activities have been uploaded in draft to a test copy of the AiM database system.

Per our conversations, this report is being submitted as draft for your review and comment. We understand that the Wyoming School Districts are still in the process of reviewing the provided data and that additional comments may be forth coming. We will work with you to resolve any issues and at your request, will upload the data final into your live AiM database.

We have appreciated the opportunity to serve the State of Wyoming and look forward to the successful completion of this project. Please contact us if you have any additional questions, or would like additional information or clarification.

Sincerely,
FACILITY ENGINEERING ASSOCIATES, P.C.

Leslie G. ZumBrunnen, P.E.
Associate

William W. Small, P.E., PMP
Vice President

Table of Contents

Executive Summary

The 2012 schools assessment, commissioned by the Wyoming School Facilities Department (SFD) represents a comprehensive assessment study of 398 K-12 school facilities and 116 ancillary buildings across the state of Wyoming. The study utilized a systems approach for facility condition assessment that generally matched the evaluation methodology implemented by the SFD in 2006 for the initial assessments and again in 2009 to update the assessments. The 2012 Assessment built on that database and the updated information has been incorporated into the AIM database currently utilized by SFD. The condition assessment methodology was adapted to utilize a common basis for assessment of the administrative and transportation facilities included in the 2012 Assessment.

The 2012 Assessment included the development of criteria and measures for building evaluation that incorporates educational suitability and technology readiness as required under W.S. 21-15-117. To that end, evaluation standards were developed for air quality, illumination, and technology readiness as a measure of the appropriateness of the student environment.

As part of the 2012 Assessment, educational and non-educational buildings were measured and each space within the facility was categorized in terms of its function. The information was used to generate dimensioned floor plans of each facility with the space categorization shown graphically and tabulated. The space calculations and categorization and floor plans have been made part of the AiM database for further evaluation by SFD.

Based on the results of the 2012 Assessment, an opinion has been developed regarding the disposition of each of the facilities assessed. A one-page summary report has been prepared for each facility and is included as an appendix. The opinions reflect a combination of factors including the Facility Condition Index (FCI) which quantifies the building deficiencies present at the facility, the Facility Condition Needs Index (FCNI) which quantifies building needs relative to illumination, indoor air quality, and technology readiness, and the space measurement evaluation which has been used with other provided data to evaluate the appropriateness of the student environment.

Three different opinions are provided: maintain, plan to renovate/remodel, and plan to close/replace. The results of the 2012 Assessment indicate only 3 of the 398 educational facilities assessed were judged to be candidates for replacement through a combination of FCI and FCNI scores. This is in part a tribute to those individuals at the various school districts that maintain their facilities. A total of 328 facilities were assessed to be within a level of FCI that would be considered maintainable with routine maintenance and small capital investment to replace specific system components. A total of 67 facilities assessed to have a level of building deficiencies sufficient to be a candidate for renovation. Generally, this reflects a condition where the FCI score was equal to or above 0.30 or the building mechanical, electrical, and plumbing systems have aged and require replacement to maintain a suitable environment. A candidate facility for remodeling was typically considered to be a renovation candidate facility that appeared to have a disproportionate ratio of classroom/instructional space square footage to total building square footage, indicating reconfiguration should be considered.

The facility needs index (FCNI) was developed specifically for Wyoming Schools to fulfill the requirements of W.S. 21-15-117. This index was used to develop cost requirements to respond to the needs for indoor air quality, illumination, and technology readiness. The results of the 2012 Assessment indicated that 221 facilities may require either a modification of existing equipment or additional equipment to meet modern standards associated with heating, cooling, and ventilation.

The results of the 2012 Assessment indicated that classrooms and other educational spaces as well as life safety egress corridors were generally illuminated at or above current design standards for illumination. Illumination was determined to be below standards in some mechanical and storage areas. Where illumination was determined to be below current standards, a cost for upgrading the current light levels was developed.

The results of the 2012 Assessment indicated that schools throughout the state were utilizing internet services that were available in their community. Available service levels vary significantly throughout the state. In general, schools were utilizing services that represented the standard for that community. Within the facilities, schools were wired with a minimum of CAT 5 cable which is the most prevalent cabling present within existing buildings and is rated for the available service levels. More powerful and advanced cable types are currently available; however, the standards of the industry and the capability of the equipment evolve at an accelerated level compared to other building systems. Service providers and technological equipment will be selected and changed continually throughout the service life of a facility and as such, was not included within the FCNI scoring.

For the purpose of this study, the ability of the facility to support the power level and distribution for computer-based technology and communication was assessed. The FCNI includes costs to upgrade electrical service and distribution within the building and classrooms to at least 9.5 watts per square foot consistent with school guidelines and applicable building codes.

The one-page summary reports for each facility appended to this report incorporates current enrollment data, space measurements, and space categorization with the existing Wyoming Schools K-12 model for class size, building size, and site size and provides an opinion for disposition of the building. It needs to be noted that our opinion is based solely on the condition of the facility, its needs to meeting current standards in accordance with W.S. 21-15-117, and a limited evaluation concerning the ratio of classroom/instructional space to the building total square footage. However, the decision to replace or renovate a facility is not a decision that should be based on just the individual building condition alone. We have recommended that a planning stage be included in the decision process that would take into account not only the FCI, FCNI, and building configuration but also look at items such as short-term and long-term capacity needs, site restrictions, educational programming, and community needs on a district-wide basis.

Introduction

The purpose of the 2012 Assessment was to provide consistent and credible information to aid in appropriately allocating funding for school facility projects. The assessment was to "build" on the information previously obtained in the 2006 and 2009 assessments.

Best practices in educational facilities asset management are centered on the performance of facility condition assessments and life-cycle analyses to evaluate deferred maintenance and long-term capital renewal. A proactive capital planning strategy considers a total cost of ownership perspective and captures data elements for analyses that address facility needs including:

- Deferred Maintenance
- Capacity Analyses
- Condition Needs Assessment
- Functionality Needs Assessment
- Life Cycle Renewal Modeling

Most public and private colleges and universities and school systems generally use some form of facility condition assessment or life cycle analysis to determine backlogs of maintenance and repair and assess their facility needs. More and more systems are also moving toward some form of parametric approach due to the relatively high cost of performing comprehensive assessments. These approaches commonly utilize cost estimating standards such as R.S. Means Facilities Maintenance and Repair Cost data. They also use one of a select few building system categorization schema such as Uniformat.

Background of the Assessment Methodology

The assessment methodology previously implemented by SFD and used in the 2012 Assessment quantifies the backlog of maintenance and repair (BMAR) associated with a facility. This approach to condition assessment was used successfully for years by Department of Defense agencies, NASA, the Smithsonian Institution, and other higher education facilities. The BMAR approach uses system-level evaluations to identify deferred maintenance and calculate standard facility condition indexes for each building. Some of the key factors considered in the selection of the BMAR approach for the evaluation of the Wyoming schools included:

- Simple and rational algorithms used in the approach
- Widespread acceptance and use of the approach by public agencies
- Recognition of the approach as a best practice by federal agencies
- Cost effectiveness of the approach for large quantity of schools
- The ease in tailoring the approach to meet the specific needs of school facilities
- Ability to generate accurate and repeatable results using a team of qualified assessors

This approach requires a facility walk-through by personnel knowledgeable in evaluating building system conditions. Generalized condition levels of major systems, from new or essentially unchanged since construction (5) to not operational or unsafe (1), are determined and repair costs developed based on a percentage of the current replacement value (CRV). Site systems and site utilities are typically evaluated as separate systems.

The total replacement value for the facility is divided into major systems as a percentage. The major system percentage of facility CRV is then multiplied by the repair cost (as a percentage of CRV) as designated by the generalized condition level. The BMAR method is useful in gaining a global understanding of deferred maintenance backlog numbers. It provides excellent consistency for relative comparisons of condition and validation of prioritization of capital expenditures between facilities. It does not provide any useful information, nor was it ever intended to, regarding long-term facility capital investment requirements or near-term specific projects as it is based on a set of proto-typical model facilities.

When the assessments are complete, the ratings are entered into a database where the parametric model converts the assessed condition ratings to a set of key metrics. The key metrics include: Deferred Maintenance (DM) costs, System Condition Index (SCI), and the Facility Condition Index (FCI).

The following figure demonstrates the simple assessment algorithm. The cost of replacing each major system in a building is a percentage of the current replacement value (CRV) of the building. The major system replacement percentage (MS%) is based on R.S. Means Square Foot Assembly Cost Data categorized by Uniformat classification. Repair cost percentages (RC%) is estimated based on experience and historical data for repairing and replacing systems based on condition. The BMAR deferred maintenance cost estimate is equal to the product of the MS%, the RC%, and the CRV for each building.

MS%

Based on Uniformat and R.S. Means Data. Modified based on actual conditions.

System	MS%	System	MS%
A Substructure	11%	E Equipment	5%
B Structure and Shell	18%	F Specialty Construction	5%
C Interiors	26%	G Site Work	N/A
D Services	35%	H Accessibility Issues	N/A

RC%

Based on Generalized Condition Level

Rating	Condition	Repair Cost
5	Excellent	2% of CRV
4	Good	10% of CRV
3	Fair	33% of CRV
2	Poor	75% of CRV
1	Failure/Crisis	100% of CRV

BMAR = [Sum (MS%)*(RC%)] CRV

- MS% = major system percentage of CRV
- RC% = repair cost percentage of CRV
- CRV = current replacement value of the building

Figure 1: Calculation of BMAR Deferred Maintenance Costs

As an example, assuming a building is 100,000 s.f. in area with an estimated replacement cost of $200 per s.f.; the CRV would be equal to $20,000,000. Based on an example condition rating of 3 – Fair for Interiors, thus a RC% of 33% (or 0.33), the BMAR deferred maintenance cost for the interiors is equal to $1,716,000 (0.26 x 0.33 x $20,000,000).

The primary assumptions dictating the accuracy of the DM cost estimates include the actual costs of the building systems (or MS% times CRV) and the estimate of repair cost percentages (RC%). RC% is based on practical experience with objective life-cycle analyses and system degradation curves for use in engineered management systems. The values for MS% have typically been based on the Parametric Cost Estimating System (PACES) developed by the U. S. Army Corps of Engineers for 42 types of facilities. This is a reasonable approach when evaluating various types of facilities such as schools with specific types of construction associated with the facility.

The final assumption, and probably the most important, is that each assessor consistently rates the condition of systems in all buildings. This becomes more of a variable with multiple assessors and requires careful training and calibration.

Project Approach

Facility Condition Index (FCI)

The BMAR approach developed for 2012 Assessment project takes the primary assumptions into consideration and allows for flexibility to increase the accuracy and consistency of the results. Instead of relying on PACES classifications to generate a single MS% value for all school buildings, the project team created a variable approach to model a multitude of system variations in elementary, junior high school, and high school buildings as well as the administrative and transportation facilities. Automated data collection and condition rating forms were created to simply and quickly identify system types and allow modifications of the MS% to accurately reflect conditions encountered at each school.

This approach captured variations in building cost due to number of floors, types of systems, and inclusion of other features and amenities. As an example, a single-story high school supported by shallow spread footings with a multipurpose room and boiler for heating only should not be expected to cost the same as a two-story school built on a special deep foundation system with elevators, stairs, gymnasium, pool, and central heating and air-condition with automated controls of the same size.

Systems and Assemblies		Yes / No	% of Gross Area	% of Foot-print	Condition 5	4	3	2	1	n/a	Notes
A. Substructure											
A10	***Foundations***										
A1010	Standard Foundations	◉ Yes ○ No		DWG	○	◉	○	○	○	○	Foundation at north wing moving and cracking, resulting in the lower score
A1020	Special Foundations	○ Yes ◉ No		DWG	○	○	○	○	○	◉	
A1030	Slab-on-Grade	◉ Yes ○ No		Dwg	◉	○	○	○	○	○	Gym and addition areas only
A20	***Basement***										
A2010	Basement Wall Structures	○ Yes ◉ No	DWG		○	○	○	○	○	◉	
B. Structure and Shell					5	4	3	2	1	n/a	
B10	***Superstructure***										
B1010	Elevated Floor Structures	◉ Yes ○ No	DWG		○	◉	○	○	○	○	Wooden floor structure over crawl space was given a 4 due to age of systems.
B1020	Roof Structural System	◉ Yes ○ No			◉	○	○	○	○	○	

Figure 2 – Portion of Electronic Data Collection Form Used by Field Assessors

The automated collection forms allowed the field assessors to select the specific systems actually observed or reported, and to provide the appropriate score. Notes were also provided for all systems that scored a 3 or lower, and for elements within a system that scored a 2 or a 1, regardless of the overall system score.

To increase consistency of the RC%, the project team developed a detailed Building Systems Condition Rating Field Guide for use by the field assessors. The Field Guide was generated based on decades of experience in performing facility condition assessments for multiple building facilities. The field assessors were trained in the use of the Field Guide at educational, administrative and transportation facilities typical of those to be assessed. Assessment procedures and scores were discussed to develop a consistency among all the assessors. During the course of the project, quality assurance assessments were performed to verify procedures and consistency of scoring.

Uniformat II format was the chosen method for categorizing the condition assessment data. The general Uniformat II categories utilized for 2012 Assessment included:

- A – Substructure
- B – Shell
- C – Interiors
- D – Services
- E-Equipment/Furnishings
- F- Special Construction
- G-Building Sitework

Categories A through F were used in the development of the DM cost model. Building sitework, specifically pavements and sidewalks, were assessed but not incorporated into the DM cost model.

Within each of the major categories there are subcategories and subsystems that define the granularity of the overall assessment. For the 2012 Assessment, the seven major categories were divided into 17 subcategories within which 54 systems were assessed. Each system was scored on a scale of 1 to 5. To increase both accuracy and consistency of the scoring, a unique set of criteria was developed for scoring each system. An example of the scoring scale and criteria for one of the systems is shown in Figure 3.

Wyoming School Facilities Department *Building Condition Systems Reference Guide*

B10 - SUPERSTRUCTURE
B1010 ELEVATED FLOOR STRUCTURES
This element consists of a structurally-supported floor system such as a cast-in-place concrete slab, wood, or metal framing system that is supported by the structural frame of the building.
Percentage entered on data collection sheet shall represent portion of the total building square footage.

RATING

5 **EXCELLENT:** Very minor or isolated areas of cracking, settlement, sagging floors, or other obvious structural defects in the elevated slabs observed. Since elevated floor structures are generally protected from environmental degradation, a rating of "5" may be given regardless of age relative to service life, provided the system meets all other requirements of this rating.

4 **GOOD:** The structural floors are performing as intended with only minor, isolated settlement, sagging, or differential movement causing distress. Slabs may have minor cracking (<1/8" width). Some isolated floor leveling repairs may be necessary to accommodate floor finishes but structural repairs (e.g. provide additional support to portions of the slab area) are not recommended.

3 **FAIR:** Slabs may have minor settlement, sagging, creaking, or bouncing, differential movement, surface distress, etc. Structural framing systems have areas of split wood joists, corrosion of steel members resulting in loss of section, or spalled concrete surfaces (exposing reinforcing steel) that indicate some isolated repairs may be necessary (e.g. provide additional support to portions of the elevated system). This is a maximum value if an engineering assessment should be requested for one or two isolated areas.

2 **POOR:** Elevated slabs show obvious evidence of settlement, sagging, differential movement, cracking and spalling, or significant distress. Structural repairs are recommended in several areas but the elevated systems will be structurally adequate after the repairs are made. This is a maximum value if an engineering assessment is recommended for the entire system.

1 **FAILURE/CRISES:** Elevated floor slabs show evidence of significant distress and may be unsafe. Similar types of defects as described for rating 2, but more extensive, such that repairs (vs. replacement) are probably not cost effective.

wsfd fea reference guide - april 2012 *11* *© 2012 Facility Engineering Associates, P.C.*

Figure 3 – Example of the Scoring Scale and Criteria for Elevated Floor Structures

To further increase the accuracy and consistency of each assessment, interview forms were developed and distributed to District personnel to gain further relevant condition data that visual observations might not identify.

The field assessment data was captured electronically and uploaded into automated calculation forms to calculate the MS% and CRV based on the actual systems and subsystems selected. Figure 4 is an example of the automated calculation form.

The unit costs used in the calculation of DM are driven by selection of the facility type:

Educational: High School; Middle School; Elementary School; Modular; Greenhouse
Non-Educational: Large Administration; Small Administration; Transportation

The cost tables associated with each category were generally based on RS Means proto-typical facilities defined within their 2012 Square Footage Cost guide. The cost tables were modified to include all of the scoring categories associated with the 2012 Assessment. The cost tables are included as Appendix A. Note that the Large Administration category uses the Middle School cost table as these facilities are generally former schools that still have gyms, multi-purpose rooms, etc. that are not found in the majority of the smaller administrative facilities (defined as less than <25,000 SF).

The field assessor used floor plan drawings of the facility to indicate the appropriate system quantity and the extent each system was utilized within the facility subject to the rules outlined in the Reference Guide. These quantities were then quantified from the scaled drawings created as part of the space measurement data collection portion of the project. A full copy of the automated calculation worksheet can be found in Appendix A.

District:	**PAR16**		
Facility ID No.:	**1516-004-0100**	Date Surveyed:	**6/18/2012**
Facility Name:	**MEETEETSE BUS BARN**	Surveyor:	**Jim Magnuson**
Facility Type	**Transportation**	Reported SF:	**8712**
Const. Date:	**1963**	Calculated SF:	**8227**

Systems and Assemblies		Present	Condition Rating	Applied Quantity	Applied Units	Calc % of BLDG SF	Unit Cost	CRV	DM %	DM Value	Notes
A. Substructure											
A10	***Foundations***										
A1010	Standard Foundations	**YES**	***5***	7310	% of Bldg Footprint SF	89%	$9.66	$70,615	2%	$1,412	
A1020	Special Foundations	**NO**			% of Bldg Footprint SF	0%	$14.12	$0	0%	$0	
A1030	Slab-on-Grade	**YES**	***5***	7310	% of Bldg Footprint SF	89%	$5.11	$37,354	2%	$747	
A20	***Basement***										
A2020	Basement Wall Structures	**NO**			Basement SF	0%	$33.25	$0	0%	$0	
B. Structure and Shell											
B10	***Superstructure***										
B1010	Elevated Floor Structures	**YES**	***3***	916	Area of Elev Floor SF	11%	$27.20	$24,915	33%	$8,222	*Score based upon age of timber structure*
B1020	Roof Structural System	**YES**	***5***	7310	Bldg Footprint SF	89%	$4.12	$30,117	2%	$602	
C. Interiors											
C10	***Interior Construction***										
C1010	Partitions	**YES**	***3***	1,200	SF of Finished Area	15%	$5.06	$6,072	33%	$2,004	*Score based on age*
C1020	Interior Doors	**YES**	***3***	1,200	SF of Finished Area	15%	$1.17	$1,404	33%	$463	*Score based on age*
C1030	Misc. Interior Specialities	**YES**	***3***	1,200	SF of Finished Area	15%	$1.50	$1,800	33%	$594	*Score based on age*
Additional systems and associated scores not shown for clarity of example											
							Total CRV	**$812,913**	Total DM	**$69,287**	
							FCI		**0.085**		

Figure 4 – Example of Calculation Form

One of the most widely used and accepted benchmarks that can be produced from the collected data is the Facility Condition Index (FCI). The FCI was developed by the National Association of College and University Business Officers (NACUBO) and is a parametric tool used to compare building conditions. FCI is calculated by dividing the Current Replacement Value of the building and its associated systems by the total cost of remedying maintenance deficiencies of those same systems (DM). The FCI is a ratio and thus the higher the FCI the worse the buildings condition. A new building with no deficiencies and 100% replacement value would have an FCI of 0.

$$FCI = \frac{Cost\ of\ Deficiencies\ (DM)}{Current\ Replacement\ Value\ (CRV)}$$

The automated calculation form totals the CRV and the DM values for each system. The total DM value divided by the Total CRV produces the FCI Score. The CRV and DM values are "raw" costs and do not include general contractor fees such as overhead and profit, soft costs associated with design consultants, management, or specific market deviations across the state. Additional cost such as these affect CRV and DM equally as a percentage and therefore do not affect the calculation of FCI.

The FCI rating classifications of "excellent" through "crisis" are based on level of service performance measures recommended by APPA (APPA, 2002). Such ratings have been published and used extensively for educational and government facilities. FCI was utilized in the 2012 Assessment as part of the basis for forming an opinion of building disposition (discussed later). FCI is a relative rating with a categorization of "excellent" to "crisis" that relates to a building's function, appearance, serviceability.

Facility Condition Needs Index (FCNI)

FCI is a comparative parameter that quantifies condition deficiencies associated with the existing building design. The existing building design is considered adequate and therefore, building upgrades are not considered in the FCI calculation. The 2012 Assessment included the development of criteria and measures for the building evaluation that incorporated educational suitability and technology readiness as required under W.S. 21-15-117. To accomplish that, evaluation standards were researched and assumed for air quality, illumination, and technology readiness as measures of the appropriateness of the student environment. The Facility Condition Needs Index (FCNI) has been defined as the composite measure of current condition while taking into account those necessary upgrades to comply with W.S. 21-15-117. The following formula represents the components associated with calculating FCNI.

$$\mathbf{FCNI} = \frac{\textit{Cost of Deficiencies (DM)} + \textit{Cost of Upgrade Needs}}{\textit{Revised Current Replacement Value } (CRV_{rev})}$$

Where:

Cost of Deficiencies = DM from FCI assessment

Cost of Upgrade Needs = Cost of illumination, indoor air quality, and technology readiness upgrades to meet requirements of W.S. 21-15-117

CRV_{rev} = Current Replacement Value revised to include appropriate upgrade values

Illumination

The project team researched lighting standards used in the educational environment throughout the nation. SFD has recommended lighting standards associated with new building construction. This resource along with standards published by the Illuminating Engineering Society North America (IESNA) and the National Fire Protection Association (NFPA) were used to develop the standards for measurement at the assessed facilities. A list of the light levels standard used for the various space categories is included as Appendix B.

A measurement protocol was developed for the field assessors. Light levels were measured in every room of the facility including closets and mechanical spaces. The assessors entered the room, turned on all available lights and placed or held the light meter at desk level as close to the center of the room as possible. The measurement was recorded in foot-candles and then compared to the standard value for the space. If the recorded measurement was not greater than or equal to the standard value, three additional distributed measurements were obtained.

For all spaces that met the required light levels, no upgrade costs were calculated and therefore no revision was made to the CRV. For those spaces that did not meet the required light levels, the room square footage was used with the unit cost for "lighting" for the appropriate space to calculate "cost to upgrade". This approach was used throughout the facility and the costs totaled to provide an overall cost for upgrading the lighting levels to the standard. Since the lighting was considered an upgrade, the CRV was revised to reflect the additional value. The cost of upgrading the lighting levels and the revised CRV were used in part to calculate the FCNI for the facility.

No systemic lighting issues were identified in the educational areas. No systemic issues were identified in the life safety egress areas. Low light levels were encountered in many mechanical spaces and in some of the gymnasium and multi-purpose rooms. The cost of the lighting upgrade was calculated and recorded for each facility where low lighting levels were encountered.

Indoor Air Quality

The evaluation of indoor air quality (IAQ) is difficult to accomplish as part of a large assessment project. On-site measurement of the major factors affecting IAQ such as temperature, humidity, pollen levels, carbon dioxide levels, etc. are subject to the operation of the building and the outdoor environment. A detailed evaluation of IAQ requires a complex sampling protocol that extends across the seasons of the year.

To address the requirements of W.S. 21-15-117 as it relates to IAQ, the 2012 Assessment considered the construction of the building and the capability of the building mechanical equipment to provide four basic elements of IAQ; thermal control, humidity control, filtration, and ventilation. Questions concerning thermal control, humidity control, and filtration were incorporated into the interview forms that were circulated to the various District personnel. The assessments included a basic accounting of the mechanical system's operation and maintenance. However, the primary factor for maintaining good indoor air quality is whether or not the building systems are capable of delivering an appropriate amount of ventilation (outside air volume) into the facility.

Four primary sources were used to develop ventilation requirements:

- Uniform Building Code (UBC)
- International Building Code (IBC)
- International Mechanical Code (IMC)
- ASHRAE Standard 62.1

The assessed buildings varied in vintage of original construction with the earliest being constructed in 1902 and the latest in 2011. Ventilation design requirements vary depending on the code or practice in place at the time of construction; however, they fall generally into one of four categories (refer to Table 1).

Table 1- Historic Ventilation Requirements

Year	Natural Ventilation Minimum Operable Window Area	Mechanical Ventilation	Code in Place
Prior to 1927[4]		30 cfm/occupant	
1927-1976	1/16 (6.25%) Floor Area	15 cfm/occupant	UBC
1977-1999[1]	1/20 (5%) Floor Area	15 cfm/occupant	UBC
2000+[3]	4% Floor Area	Varies[2]	IBC and IMC

1. Wyoming adopted the 1976 UBC in 1977. Prior to that time, a code was not in place.
2. Based on occupant density, floor area, and space use type.
3. Wyoming adopted the IBC and IMC in 2000.
4. 1927 marks the first year the UBC was in place. Prior to that time, outside air was provided at rates varying from 10 to 30 cfm/occupant.

Overall, the natural ventilation requirements have decreased with time while mechanical ventilation requirements have become more complex. Design expectations have changed as well with a decreased reliance on natural ventilation and corresponding increase in use of mechanical ventilation. For 2012 Assessment, the requirements of the most current codes have been used to judge the capability of the existing mechanical equipment to deliver the required ventilation. The minimum requirements for mechanical systems are summarized in Table 2.

To determine whether or not buildings generally have the capability to comply with minimum ventilation requirements, field data was collected and reviewed:

- Natural ventilation – field measurements were taken of the operable window area. The area was then compared to the floor area of the space served by the associated windows.
- Mechanical ventilation – field measurements were taken of the outside air duct inlets. Assuming a maximum airflow velocity of 250 fpm, the potential airflow rate of the outside air opening was then calculated.

Table 2- Minimum Ventilation Requirements for Mechanical Systems

Space Type	Required Airflow (cfm/SF)	Required Airflow (cfm)	Airflow per Occupant (cfm)	Occupants (#/1000 SF)	Airflow per SF (cfm)
Art classroom	0.38		10	20	0.18
Breakrooms	0.19		5	25	0.06
Cafeteria	0.93		7.5	100	0.18
Classrooms		450			
Computer lab	0.37		10	25	0.12
Conference/meeting	0.31		5	50	0.06
Corridors	0.06		0	0	0.06
Kitchen	0.27		7.5	20	0.12
Library	0.17		5	10	0.12
Media center	0.37		10	25	0.12
Multi-purpose	0.81		7.5	100	0.06
Music/theater/dance	0.41		10	35	0.06
Office	0.09		6	5	0.06
Lobby	0.11		5	10	0.06
Science lab	0.43		10	25	0.18
Wood/metal shop	0.38		10	20	0.18

In some cases, the building was served by both operable windows and mechanical systems, neither of which complied with minimum ventilation requirements on their own. In these cases, a hybrid calculation was performed. The calculation assumed the operable window area remained the same and estimated the outside air required to be provided by a mechanical system:

$$OA_{Hyb} = OA_{Req} * \left[1 - \frac{A_{Act}}{A_{Req}}\right]$$

Where:

OA_{Hyb} = Outside air required if supplemented by operable windows, CFM

OA_{Req} = Minimum ventilation required if system was 100% mechanical, CFM

A_{Act} = Existing operable window area, SF

A_{Req} = Minimum operable window area required if ventilation is provided only by operable windows, SF

The analysis and field measurements for ventilation were only performed at the educational facilities. Based on the assessment data, 317 facilities were judged capable of providing sufficient outside air to meet the required ventilation standard. A "note" was created within the database for those facilities that, according to the analysis, may not deliver an appropriate amount of ventilation and should be studied further. It should be noted that because a facility did not pass the criteria established in the analysis does not mean that insufficient ventilation is delivered as our analysis set conservative threshold criteria. Detailed evaluation of the mechanical systems operation was not possible during the assessment. Further evaluation of the system operation would be required to determine whether the required ventilation is possible.

To quantify the impact of modifying the HVAC systems to better condition the facility, we developed an upgrade cost for the FCNI. An allowance upgrade was incorporated into the FCNI for facilities that lacked the ability to provide heating and cooling to all spaces with some exceptions (gymnasiums, multi-purpose rooms, and aquatic facilities). If the assessment revealed that the facility did not have systems capable of delivering sufficient ventilation during both the heating and cooling season, the facility was flagged for potential further study.

The amount of the allowance was determined considering the type of system currently in place, the area served, the construction of the building and the barriers involved in retrofitting any additional ductwork and controls. Multiple types of system changes were considered and each system was evaluated in terms of feasibility and cost. Two basic retrofit scenarios were used to calculate the applicable upgrade cost and revised CRV. One scenario included adding cooling elements and controls to an existing system that generally already provided heating and mechanical ventilation. The other scenario involved the addition of a new system to provide heating, cooling, and mechanical ventilation throughout the facility. The calculation of the upgrade and the applicable unit costs are included in Appendix C to this report.

Technology Readiness

To address the requirements of W.S. 21-15-117 as it relates to Technology Readiness, the 2012 Assessment considered two basic issues; the connection of the facility to the internet and the electrical capability of the facility to support technology. The issue of connecting to the internet involves three basic elements; service availability within the community compared to the level of service used at the facility, service distribution throughout the facility, and the ability of the users to connect. The issue of electrical capability involves; sufficiency of power to the facility and to the switchgear, sufficient of power distribution to the classrooms (circuits), power distribution in the classrooms, and the ability of classrooms to control lighting levels.

Internet Connectivity

The assessors completed a supplemental interview form as part of their assessment at each facility. Information was obtained that confirmed the level of internet service used, wiring within the facility, and number of connection ports per classroom. The project team also contacted service providers within the various Districts to determine the level of service available to the community.

The 2012 Assessment confirmed that there is wide variation of internet service across the Districts. Service varied from land line connections at many facilities to fiber optic cables in urban environments to satellite services in remote locations. Consequently, service speed varied from 1.5 mbps to 200 mbps with the typical average speed of 25 mbps. Facilities assessed were generally utilizing the best service available, based on the state service contract. However, based on new third-party management, a new state-wide contract is being developed that would take advantage of higher speed from competing firms in some localized communities.

The 2012 Assessment revealed that all of the educational facilities have a minimum of Cat 5 cabling as the primary telecommunication cabling. There are facilities within the Districts that have installed Cat 6 and Fiber Optic cabling. Cat 5 cable is currently the standard telecommunication cabling in existing buildings and at a 100 mbps rating is more than able to handle the available service speeds. New products constantly become available with greater

speed and flexibility. Table 3 is a summary of the ISO/IEC 11801 standard for telecommunication cabling. All facilities assessed had at least one telephone and one internet connection per classroom. Access was either provided through wired connections or protected wireless networks.

Table 3 – ISO/IEC 11801 Standard for Telecommunication Cabling

Cable Type	Transfer Speed	Bandwidth
Cat 5	10 to 100Mbps Ethernet	100 MHz
Cat 5e	1000Mbps Gigabit Ethernet	
Cat 6	10 Gigabit Ethernet	250MHz
Cat 7a	10 Gigabit Ethernet	1000MHz
Optical Fiber		200-4700MHz

The project team concluded that all assessed facilities have internet capabilities that were consistent with the current industry standard. As standards in the telecommunication industry evolve more rapidly than other sectors of the building industry, obsolescence of telecommunication equipment outpaces the service life. Decisions to replace or upgrade telecommunication equipment should not be coupled with FCI or FCNI since their replacement will be determined by other factors.

Electrical Power and Distribution

The second part of technology readiness was the ability to use electronic and computer systems effectively within the classroom which is related to the power capacity available, distribution within the classroom, and control. The ability to control lighting within the classroom is important for the effective use of electronic components such as smart boards, projectors, etc. The control systems in each classroom were assessed noting whether classrooms had a single on-off switch or other means for controlling the lighting such as multi-zone control.

For those facilities in which the classroom lighting control was a single zone, on-off switch, an upgrade cost was applied to that classroom. The upgrade cost assumed that additional wiring and switches would be needed to allow multi-zone control for the existing fixtures and that existing wall and ceiling finishes would be affected. A unit cost for retrofit lighting was developed and that upgrade cost was multiplied by the square footage of all classrooms, laboratories, and instructional support areas. No revision to the CRV was applied.

The availability of power within the facility to allow connection of computer-related electronics was considered at three levels:

1. Sufficiency of power to the facility and to the switchgear
2. Sufficient of power distribution to the classrooms (power circuits)
3. Power distribution within the classrooms

The assessors recorded the available capacity of the primary transformers (if available), and the capacity of the primary switchgear. They also assessed the number of 110v power circuits provided per classroom as well as the number and distribution of duplex outlets within each classroom. The data was used to develop a decision tree for establishing an upgrade cost to be applied to the FCNI:

Sufficiency of Power –Using a design standard for new construction applicable to schools, if the available power was in excess of the 9.5 W/SF, no power upgrade was considered. If the available power was less than 9.5 W/SF, then an upgrade of the entire electrical distribution system was assumed. The cost to "upgrade" was calculated as:

$$UC_{TR1} = (CRV_{ELEC} * R_F) - DM_{ELEC}$$

Where:

UC_{TR1} = Upgrade Cost TR1

CRV_{ELEC} = Component Replacement Value of the Entire Electrical System

DM_{ELEC} = Deferred Maintenance Value of the Electrical system (based on condition score)

R_F = Renovation Factor = 1.5

The renovation factor accounts for significant disruption of existing finishes and partitions. It was assumed that this upgrade would not occur as part of a major renovation or remodel. It was also assumed that if this level of upgrade was considered, upgrading the sufficiency of distribution and power distribution within the classroom would also be needed and their associated costs were included in this upgrade.

Sufficiency of Distribution - If at least two 110v power circuits were available per classroom, then no upgrade to the power distribution was considered. If less than two 110v power circuits were present, then the distribution system to and within the classroom areas was determined to require upgrade. Classrooms for this calculation were defined as "classrooms", "laboratories", and "instructional spaces". The cost to "upgrade" was calculated as:

$$UC_{TR2} = (CRV_{ECR} * ES_F * R_F) - (DM_{ELEC} * (CSF/GSF) * ES_F)$$

Where:

UC_{TR2} = Upgrade Cost TR2

CRV_{ECR} = Component Replacement Value of the Electrical System for classrooms, laboratories, and instructional support areas.

DM_{ELEC} = Deferred Maintenance Value of the Electrical system (based on condition score)

CSF = Classroom Square footage

GSF = Gross Square footage

ES_F =Electrical System Factor defined as the portion of the total unit cost minus the cost of the primary switchgear. Assumed to be 70% for Elementary Schools, 75% for Middle Schools, and 80% for High Schools.

R_F = Renovation Factor = 1.33

The lower renovation factor is similar to that used for the sufficiency of power upgrade calculations but assumed less disruption to finishes and building components due to the reduced area impacted by the upgrades. It was also assumed that if this level of upgrade was considered, upgrading the power distribution within the classroom would also be needed and its associated costs were included in this upgrade.

Power Distribution Within the Classroom - If at least six duplex power outlets were available and evenly distributed around the classroom, then no upgrade costs were considered. If less than six duplex power outlets were present or if the outlets were not evenly distributed, then the distribution system within the classroom areas was determined to require an upgrade. Classrooms for this calculation were defined as "classrooms", "laboratories", and "instructional spaces". The cost to upgrade was calculated as:

$$UC_{TR3} = (CRV_{ECR} * ES_F * R_F) - (DM_{ELEC} * (CSF/GSF) * ES_F)$$

Where:

UC_{TR3} = Upgrade Cost TR3

CRV_{ECR} =Component Replacement Value of the Electrical System for classrooms, laboratories, and instructional support areas.

DM_{ELEC} =Deferred Maintenance Value of the Electrical system (based on condition score)

CSF = Classroom Square footage

GSF = Gross Square footage

ES_F = Electrical System Factor defined as the portion of the total unit cost associated with the distribution wiring from the distribution panels throughout the classrooms. Assumed to be 35% for Elementary Schools, 37.5% for Middle Schools, and 40% for High Schools.

R_F =Renovation Factor = 1.33

Appropriateness of Student Environment

For the purpose of the 2012 Assessment, appropriateness of the student environment was defined as facility elements that affect the learning environment. Capacity and programming elements also effect the appropriateness of the student environment; however, these elements were beyond the scope of the 2012 Assessment. The facility elements included in our evaluation were the condition of the facility as designed and the needs of the facility to provide a learning environment consistent with today's standards for building construction. The FCI and the FCNI include many of those factors. Two additional elements that were considered as part of the assessment included security and the measurement and categorization of the space within the facility.

Security

During the field assessment, each assessor observed the existing security system in place at the facility. The elements considered consisted of functional locking mechanisms at all doorways, surveillance cameras around the facility, and security protocols at the main entrance.

The results of the assessment revealed that the level of security varied significantly across the facilities assessed. Nearly all facilities had locks on the doorways; however, often doorways were left unlocked during school hours to allow delivery of equipment and supplies and accommodate maintenance personnel. Manual locks, requiring keyed entry were most common. Some facilities had electronic locks that allowed entry from a key pad or card swipe. Many facilities had a controlled entry procedure at the main entrance. Visitors to the facility could be observed from an adjacent administrative space. Some facilities were equipped with surveillance cameras and intercoms at the main entrance to allow screening of visitors prior to entry.

SFD has yet to adopt a security policy for all facilities. Without a specific policy in place, no opinions have been made to provide replacement or upgrade of equipment or modification of the facility for a specific level of security. The project team has captured the data obtained during the 2012 Assessment and that data can be retrieved for future use if desired.

Space Measurement

Space measurement and categorization was performed at all of the assessed facilities. Procedures used for obtaining the measurements are included in Appendix D to this report. Measurements were taken at every room in the facility sufficient to create a single-line floor plan drawing of each level. It was not the purpose of the space measurement effort to create "as-built" drawings of the facility as might be required at the completion of construction. The purpose of the space measurement plan drawings was to provide sufficient detail to accurately depict the floor plans of the facility and calculate square footage of the space by use category. The use categories to be depicted are summarized in Table 4.

Table 4 – Space Measurement Categorization

TYPE LIST	TYPE CODE	BLDG TYPE
Administration	ADM	EDUC/ADM
Assembly	ASM	EDUC
Assigned Storage	AST	EDUC/ADM
Building Support	BSP	EDUC/ADM
Circulation	CIR	TRANSP
Classroom	CLS	EDUC
Conference	CNF	TRANSP
Courtyards	CTY	EDUC/ADM
Covered Walkways	CWW	EDUC/ADM
Horizontal Circulation	HCN	EDUC/ADM
Instructional Support	ISP	EDUC
Laboratory	LAB	EDUC
Library/Media Center	LMC	EDUC
Maintenance	MNT	ADM
Mechanical/Electrical/Communications	MEC	TRANSP
Office	OFF	TRANSP
Open Space	OSP	EDUC/ADM
Physical Education	PED	EDUC
Public Restrooms	PRR	EDUC/ADM
Restrooms	RRM	TRANSP
Service Bays	SVB	TRANSP
Storage	STG	TRANSP
Student Dining	STD	EDUC
Support	SPT	TRANSP
Unassigned Space	USP	EDUC/ADM
Vertical Circulation	VCN	EDUC/ADM

The use categorization of the rooms was based on available information. Spaces were given a type and use classification based upon what was observed within the space at the time of the survey. If an escort was present and the type and use was unclear, the team would ask for input from that individual. Once a working drawing of the space measurement data was complete, a copy of the drawing and categorization was sent to the facility manager or principal to verify that the categorization accurately reflected the current use of the space. Corrections were made based on information received from the facilities.

The square footage information obtained was used to calculate FCI and FCNI. Additionally, the project team considered the space measurement data in relation to capacity of the building, classroom size, and site size. Evaluation of capacity was not part of the 2012 Assessment scope of work; however, information derived from the space measurement data when compared to enrollment and capacity data provided by SFD, can provide indications of appropriateness of building size.

Appendix E of this report contains one-page summaries of data on each of the educational facilities assessed. The space measurement data has been used in each of these summary pages in the calculation of the FCI and FCNI for each facility. The summary report page has been structured to compare space measurement data to areas generated by the SFD design model calculators for student population, building size, classroom capacity, and site size.

School Type	**HS**		
Year Built	**1959**		
Age	**53**		
Existing Building Size (GSF)	**205,420**		
Existing Site Size (Acres)	**23.5**		
Model Site Size (based on capacity)	28.4		
Current Enrollment	Students		Expected GSF
2011-2012 ADM Enrollment	**742**	→	140,355
			from WSFD Space Calculation

Figure 5 – Example A of One-Page Summary Report Data

Figure 5 shows a portion of the one-page summary for a high school. In this example, the building has a gross square footage of 205,420 sf as determined from the space measurement data. The student enrollment obtained through the SFD AiM database for this school is 742 students. The SFD design model for a school with that enrollment is 140,355 sf. Based on the current enrollment and taking into account no other district planning/information, the school is significantly oversized. Similarly, the existing site (23.5 acres) is undersized compared to the site size generated by the SFD design model (28.4 acres) using the SFD-provided student capacity for the existing facility.

Current Building(s) Space Analysis	Students		GSF
Model (From WSFD Space Calculation)	1,221	←	**205,420**
WSFD-provided Capacity	**1,073**	→	183,706
Space Delta = Capacity-Model	(933)		(21,714)
Space Ratio = Space Delta / Existing Building Size			**-11%**

Figure 6 – Example B of One-Page Summary Report Data

Figure 6 shows another portion of the one-page summary for the above school. In this analysis, the WSFD-provided capacity for the designated instruction space was inserted into the SFD's Allowable Square Footage Calculator. The calculator generates a gross square footage of a high school if constructed today. FEA also used the existing gross square footage in the calculator formulas to determine a "theoretical" student capacity. The square footage delta is then compared to the existing building square footage. Based on our model, we have expected a range of +/- 10% to be a reasonably proportioned facility. In this case, the analysis has shown a disproportionately low ratio of classroom/instructional space to gross square footage.

There are other comparisons provided on the one-page summaries in the appendix. The one-page summaries are only one form of structured reporting that is possible from the database. The purpose of providing these summaries is two-fold; first to demonstrate the power of the database as a tool in the decision-making process, and second, to emphasize the need to review data beyond just the condition of a building when deciding its disposition.

Opinion of Building Dispositions

Based on the results of the 2012 Assessment, the project team has provided opinions for building disposition within three broad categories; maintain, plan to renovate/remodel, and plan to close/replace. The project team has not provided a "list" or "ranking" of assessed facilities based solely on building condition. Such a list or ranking would not account for many of the other factors important to the decision of building disposition. The one-page summaries provided in Appendix E demonstrate how the Aim database can be utilized in the decision process.

Maintain Category FCI<0.15

The decision matrix used in the 2012 Assessment begins with those facilities that were assessed to have an FCI of less than 0.15. A total of 201 facilities were assessed to be in this category. Facilities that qualify for this category are often recently constructed. All or nearly all of the systems were in good to excellent condition which, within the assessment protocol established, can be characterized as systems with less than 10% deficiencies. The expectation is that facilities that qualify for this category can be maintained within what would be considered routine maintenance and repair with replacement of system components as warranted by condition and service life.

Maintain Category FCI≥0.15 and <0.30

The decision matrix used in the assessment characterized facilities with a FCI score equal to or above 0.15 but less than 0.30 to be still within the "maintain" category. These are facilities that may have systems with up to 25% deficiencies when approaching an FCI of 0.30. The overall condition of the systems would be considered average and within its respective service life. For facilities in this category, the decision matrix performed a second check to determine the assessed condition of the mechanical, electrical, plumbing (MEP) systems. If the assessed system condition index (SCI) of the MEP systems was less than 0.33, then the facility was considered in the "maintain" category. However, if the SCI of the MEP systems was equal to or exceeded 0.33, then the facility was considered a candidate for renovation and would be placed in the "plan to renovate/remodel" category. Based on the conditions observed in the 2012 Assessment, 147 facilities were within the FCI range between 0.15 and 0.3 but 20 facilities were affected by this second criteria and moved to the "plan to close/replace" category. The purpose of the secondary check was to recognize that if the facility's MEP systems were in poor condition, the indoor air quality of the facility could be compromised. Large scale renovation of the MEP systems potentially affects the majority of the building interior finishes and therefore requires a major renovation effort.

Plan to Renovate/Remodel Category FCI ≥ 0.30 and < 0.65

The decision matrix used in the assessment characterized facilities that scored a FCI equal to or above 0.30 but less than 0.65 were within the "plan to renovate/remodel" category. These are facilities that generally have systems with 25% or more deficiencies and are in the second half or last third of the expected service life. A total of 50 facilities were assessed to be within this category.

For facilities in this category, the decision matrix performed a second check to determine the assessed condition of the building components that contribute to the FCNI. If the FCNI was determined to be greater than or equal to 0.65, then the facility was moved to the "plan to close/replace" category. The secondary check was performed to recognize that if the overall building conditions were generally poor and significant upgrade needs were required as evidenced by the FCNI score, a renovation of the facility would require replacement of entire systems. and a "plan to close/replace" should be considered. Based on the conditions observed in the 2012 Assessment, 3 facilities with a FCI score between 0.30 and .65 were affected by this second criteria and moved to the "plan to close/replace" category.

The decision matrix also reviewed the proportionality of classroom/instructional space to gross square footage of the building. If the proportions were not within the +/- 10% tolerance established above, the opinion was changed from "plan to renovate" to "plan to remodel". We anticipated that those facilities with a ratio greater than +/-10% would most likely need some spacial reconfiguration to better accommodate student needs as part of the overall renovation.

Plan to Close/Replace Category FCI≥0.65

The decision matrix used in the assessment characterized facilities that scored a FCI equal to or above 0.65 were within the "plan to close/replace" category. These are facilities that are generally aged with systems that have up to 50% deficiencies. A score of 0.65 is typically considered the point in which economics determine it is generally more cost effective to replace than renovate. No facilities were assessed to be in this category.

Facility Report Summaries

Appendix E contains one-page report summaries for each of the facilities included in the 2012 Assessment. The report summaries demonstrate one possible report format that can be generated from the AiM database. The summaries include basic information about the building such as age, function, square footage, site size, etc. Also included is information about the building condition in the form of FCI, FCNI and SCI for MEP systems. The opinion of building disposition has been included based on the decision tree previously discussed.

A number of informational notes have been included in the database and have been included on the summaries where applicable. Several of the notes are related to the assessment information obtained. These include:

- **Building Structure** – A number of facilities were noted to have persistent, unresolved structural issues related to the frame of the facility. Generally, these were facilities where the category of Superstructure (frame of the building, slab-on-grade and elevated floor slabs) scored 3 or below during the assessment. These issues should be considered when deciding a building's disposition.
- **Basement Water Intrusion** – A number of facilities were noted to have persistent, unresolved issues related to water intrusion within the basement level. These facilities may require significant expenditures to the correct the problem that extend beyond the cost to correct the deficiency of the system. These issues should be considered when deciding a building's disposition.
- **Timber Framing** – A number of facilities were noted to have persistent, unresolved issues related to the timber frame of the facility. Additional facilities were noted to have extremely aged timber framed systems (40+ years). Generally, these were facilities where the wood framing of the walls, floors or roof scored 3 or below during the assessment. Timber framing is subject to cracking, distortion and deterioration with age and should be considered when deciding a building's disposition.
- **Modular Construction** – A note was included for modular buildings that scored in the "plan to renovate/remodel" category. Typically, modular buildings consist of light-gage construction that is difficult to effectively renovate and may justify replacement depending on the level of the renovation anticipated. This should be considered when deciding a building's disposition.
- **Outside Air Requirements -** A note was included within the database for those facilities that, according to the analysis discussed previously related to FCNI, may not deliver an appropriate amount of ventilation and should be studied further. It should be noted that because a facility did not pass the criteria established in the ventilation analysis does not mean that insufficient ventilation is delivered as our analysis set conservative threshold criteria. Further evaluation of the system operation is required to determine whether the required ventilation is possible.
- **Electrical Equipment** – A note was included in the database for facilities where Federal Pacific electrical equipment was encountered. The equipment manufacturer is no longer in business and the equipment is aged. Replacement of the equipment should be considered.

- **Space Measurement Ratios** - The summary report page has been structured to compare space measurement data to areas generated by the SFD design model calculators for student population, building size, classroom capacity, and site size. A note has been included for facilities where the ratio of classroom/instructional spaces to gross building square footages varies by more than 10%. The purpose of the note is to call attention to a potential opportunity that when a facility is considered a candidate for renovation, reconfiguration of physical spaces may be necessary to meet educational space and programming requirements.
- **Site Size Ratio** - The summary report page has been structured to compare the existing site to a theoretical site area if the existing building was to be constructed in the present. For those sites that are smaller than what the SFD design model suggests, a note is generated so that planners can take into account potential issues with parking, access, and/or playground areas.

The above notes were recognized as elements that could have potential impact on the final decision regarding the facility disposition. Our opinion should be considered as a starting point in the planning process as our opinion has been formed by looking at the facility as an isolated entity and it does not take into account other important elements such as current and future capacity needs, educational programming, location, site, and interaction with other facilities within a district. It is our opinion that a comprehensive plan should be developed on a district by district basis that considers all relevant criteria prior to making any final decisions on the disposition of any single facility.

Appendix A

Unit Cost Tables and Automatic Calculation Worksheet

Wyoming School Facilities Commission - Facility Condition Assessments
Unit Cost Tables by Facility Type

26-Sep-12	Facility Type		Elementary School	Middle School	High School	Prefab	Green house		Large Admin >25,000 SF	Small Admin <25,000	Transportation
Systems and Assemblies		Educational Units						Admin/ Transp Units			
A. Substructure											
A10	***Foundations***										
A1010	Standard Foundations	$/SF	$ 9.66	$ 9.66	$ 9.66	$ 6.66	$ 1.62	$/SF	$ 9.66	$ 7.38	$ 4.84
A1020	Special Foundations	$/SF	$ 20.12	$ 19.65	$ 19.34	$ -	$ -	$/SF	$ 19.65	na	na
A1030	Slab-on-Grade	$/SF	$ 5.11	$ 5.11	$ 5.11	$ 5.11	$ 5.11	$/SF	$ 5.11	$ 5.11	$ 7.86
A20	***Basement***										
A2020	Basement Walls	$/SF	$ 33.25	$ 23.65	$ 20.45	$ -	$ -	$/SF	$ 23.65	$ 26.85	$ 26.85
B. Structure and Shell											
B10	***Superstructure***										
B1010	Floor Structural System	$/SF	$ 10.91	$ 21.14	$ 21.14	$ 3.24	$ 3.49	$/SF	$ 21.14	$ 3.24	$ 3.24
B1020	Roof Structural System	$/SF	$ 4.12	$ 14.72	$ 14.72	$ 6.34	$ 3.52	$/SF	$ 14.72	$ 9.73	$ 10.18
B20	***Exterior Enclosure***										
B2010	Exterior Walls	$/GSF	$ 11.24	$ 11.10	$ 10.93	$ 11.63	$ 2.33	$/GSF	$ 11.10	$ 16.54	$ 4.50
B2020	Windows	$/GSF	$ 4.77	$ 6.16	$ 8.04	$ 5.82	$ 21.17	$/GSF	$ 6.16	$ 3.90	$ 5.66
B2030	Doors	$/GSF	$ 0.68	$ 0.64	$ 0.51	$ 4.04	$ 4.04	$/GSF	$ 0.64	$ 2.93	$ 8.72
B30	***Roofing***										
B3010	Roof Coverings	$/SF	$ 10.36	$ 10.36	$ 10.36	$ 5.06	$ 1.95	$/SF	$ 10.36	$ 8.47	$ 8.47
C. Interiors											
C10	***Interior Construction***										
C1010	Partitions	$/GSF	$ 4.83	$ 5.41	$ 5.80	$ 2.06	$ 2.06	$/SF-Admin	$ 5.41	$ 4.24	$ 4.24
C1020	Interior Doors	$/GSF	$ 1.71	$ 1.60	$ 1.71	$ 2.38	$ 1.19	$/SF-Admin	$ 1.60	$ 5.97	$ 5.97
C1030	Misc. Interior Specialities	$/GSF	$ 1.70	$ 1.29	$ 1.19		$ 1.19	$/SF-Admin	$ 1.29	$ 0.49	$ 0.49
C20	***Stairs/Fire Escapes***				$ -						
C2010	Stair Construction	$/GSF	$ 0.61	$ 0.75	$ 0.84	$ -	$ 1.16	$/GSF	$ 0.75	$ 1.96	$ 1.37
C2020	Stair Finishes	$/GSF	$ 0.24	$ 0.30	$ 0.34	$ -	$ 0.11	$/GSF	$ 0.30	$ 0.71	$ 0.20
C30	***Interior Finishes***				$ -						
C3010	Walls	$/GSF	$ 4.46	$ 4.83	$ 3.22	$ 0.37	$ 0.37	$/SF-Admin	$ 4.83	$ 1.49	$ 1.49
C3020	Floors	$/GSF	$ 7.05	$ 9.80	$ 6.65	$ 2.70	$ 2.70	$/SF-Admin	$ 9.80	$ 8.33	$ 1.38
C3030	Ceilings	$/GSF	$ 6.86	$ 6.86	$ 6.86	$ 4.11	$ 0.37	$/SF-Admin	$ 6.86	$ 6.86	$ 3.69
D. Services											
D10	***Systems)***										
D1010	Elevators	Each	$ 89,000	$ 89,000	$ 89,000			Each	$ 89,000	$ 89,000	N/A
D1013	Lifts	Each	$ 16,150	$ 16,150	$ 16,150			Each	$ 16,150	$ 16,150	N/A
D20	***Plumbing***										
D2010	Plumbing Fixtures	$/GSF	$ 1.50	$ 0.75	$ 0.75	$ 4.87	$ 1.82	$/GSF	$ 0.75	$ 2.12	$ 0.84
D2020	Domestic Water Dist.	$/GSF	$ 11.41	$ 5.37	$ 5.31	$ 5.05	$ 1.95	$/GSF	$ 5.37	$ 1.55	$ 1.09
D2030	Sanitary Waste	$/GSF	$ 1.39	$ 1.18	$ 1.03	$ 3.85	$ 1.93	$/GSF	$ 1.18	$ 2.20	$ 1.54
D2040	Stormwater Drainage	$/SF	$ 1.18	$ 1.34	$ 1.36	$ -	$ 1.36	$/SF	$ 1.34	$ 2.99	$ 2.99
D30	***HVAC***										
D3010	Energy Supply	$/GSF	$ 1.25	$ 1.00	$ 0.75	$ 7.40	$ 3.70	$/GSF	$ 1.00	$ 1.25	$ 1.25
D3011	Geothermal Heating/Cooling Supply	$/SF	$ 5.10	$ 4.50	$ 3.90	$ -	$ -	$/SF	$ 4.50	na	na

Wyoming School Facilities Commission - Facility Condition Assessments
Unit Cost Tables by Facility Type

26-Sep-12	Facility Type		Elementary School	Middle School	High School	Prefab	Green house		Large Admin >25,000 SF	Small Admin <25,000	Transportation
Systems and Assemblies		Educational Units						Admin/ Transp Units			
D3020	Central Plant Heating	$/SF	$ 3.55	$ 3.55	$ 3.55	$ -	$ -	$/SF	$ 3.55	$ 3.55	$ 3.55
D3030	Central Plant Cooling	$/SF	$ 6.06	$ 6.06	$ 6.06	$ -	$ -	$/SF	$ 6.06	$ 6.06	$ 6.06
D3040	Distribution Systems	$/SF						$/SF	$ -	$ -	$ -
D3040A	Distribution Systems - Heat	$/SF	$ 7.10	$ 7.10	$ 7.10	$ -	$ -	$/SF	$ 7.10	$ 7.10	$ 7.10
D3040B	Distribution Systems - Cooling	$/SF	$ 6.06	$ 6.06	$ 6.06	$ -	$ -	$/SF	$ 6.06	$ 6.06	$ 6.06
D3041	Vehicular Exhaust Systems							$/SF	$ -	na	$ 2.57
D3050	Self-Contained / Package Units	$/SF	$ 19.70	$ 19.70	$ 19.70	$ 12.20	$ 3.40	$/SF	$ 19.70	$ 20.70	$ 10.19
D3050A	Split Systems - cooling condenser in AHU	$/SF	$ 6.93	$ 6.93	$ 6.93	$ -		$/SF	$ 6.93	$ 6.93	$ 6.93
D3053	Swamp Coolers/Window Units	$/SF	$ 3.00	$ 3.00	$ 3.00	$ 3.00	$ 3.00	$/SF	$ 3.00	$ 3.00	$ 3.00
D3060	Controls	$/SF	$ 2.00	$ 2.00	$ 2.00	$ 1.50	$ 0.34	$/SF	$ 2.00	$ 2.00	$ 2.00
D40	***Fire Protection***										
D4010	Sprinklers	$/SF	$ 3.13	$ 2.71	$ 2.71	$ -	$ -	$/SF	$ 2.71	$ 3.64	$ 4.73
D4020	Standpipes	$/SF	$ 0.39	$ 0.32	$ 0.32	$ -	$ -	$/SF	$ 0.32	$ 1.37	$ 0.87
D4030	Alarms	$/SF	$ 1.84	$ 2.14	$ 2.00	$ 0.67	$ 0.67	$/SF	$ 2.14	$ 3.55	$ 1.72
D50	***Electrical***										
D5010	Service and Distribution	$/GSF	$ 9.48	$ 8.85	$ 8.84	$ 10.94	$ 5.51	$/GSF	$ 8.85	$ 14.62	$ 8.44
D5020	Lighting	$/GSF	$ 2.67	$ 2.48	$ 2.48	$ 2.74	$ 0.48	$/GSF	$ 2.48	$ 4.87	$ 2.81
D5030	Communication/Security	$/GSF	$ 1.84	$ 3.83	$ 3.57	$ 1.00	$ 1.00	$/GSF	$ 3.83	$ 3.55	$ 1.72
D5040	Emergency Power	$/GSF	$ 0.48	$ 0.44	$ 0.59	$ -	$ -	$/GSF	$ 0.44	$ 0.22	$ 0.09
E. Equipment and Furnishings											
E10	***Equipment***										
E1020	Institutional Equipment	$/GSF	$ 0.17	$ 2.15	$ 1.82	$ -					
E1090	Kitchen Equipment	$/GSF	$ 0.20	$ 0.53	$ 0.45	$ -					
E20	***Furnishings***				$ -						
E2010	Fixed Furnishings	$/GSF	$ 7.60	$ 7.60	$ 7.60	$ 7.60		$/GSF	$ 7.60	$ 3.42	$ 3.42
F. Special Construction and Demolition											
F10	***Special Construction***										
F1010	Greenhouses/Aquaculture	$/SF	$ 12.04	$ 12.04	$ 12.04	$ -	$ 12.04	$/SF	$ 12.04	N/A	N/A
F1020	Integrated Construction										
F1021	Gymnasiums w/locker rms	$/SF	$ 34.40	$ 47.20	$ 57.75	$ -	$ -	$/SF	$ 47.20	N/A	N/A
F1022	Auditorium	$/SF	$ -	$ 75.20	$ 75.20	$ -	$ -	$/SF	$ 75.20	$ 75.20	N/A
F1023	Multi-purpose Rooms	$/SF	$ 42.50	$ 42.50	$ 42.50	$ -	$ -	$/SF	$ 42.50	$ 42.50	N/A
F1024	Planetariums	$/SF	$ 30.00	$ 30.00	$ 30.00	$ -	$ -	$/SF	$ 30.00	N/A	N/A
F1040	Aquatic Facilities	$/SF	$ -	$ 86.40	$ 86.40	$ -	$ -	$/SF	$ 86.40	N/A	N/A
F1111	Automatic Bus Wash Bay							Each	N/A	N/A	$ 81,298
F1112	Bus Wash Bay, Wand System							Each	N/A	N/A	$ 23,770
F1120	Vehicular Lift Bay							Each	N/A	N/A	$ 20,300

$/SF	Unit cost multiplied by actual square footage of area served by component to obtain component CRV
$/GSF	Unit cost multipled by building GSF to obtain component CRV
Each	Unit cost multipled by # of components to obtain component CRV
$/SF-Admin	Unit cost multiplied by actual square footage of finished out administrative areas with adminstration and transportation facilities to obtain component CRV

Wyoming School Facilities Department - Facility Condition Assessment
Draft Component Scores - Example Automated Calculation Worksheet

District: **District No.**
School No.: **School ID**
School Name: **School Name**
School Type **High School**
Const. Date: **1971**

Date Surveyed: **1/1/2012**
Surveyor: **Surveyor Name**
Reported SF: **120000** Footprint
Calculated SF: **119974** 110000

Systems and Assemblies		Present	Condition Rating	Applied Quantity	Applied Units	Calc % of BLDG SF	Unit Cost	CRV	DM %	DM Value	Field Notes
A. Substructure											
A10	***Foundations***										
A1010	Standard Foundations	**YES**	***5***	110000	Footprint SF	92%	$9.66	$1,062,600	2%	$21,252	
A1020	Special Foundations	**NO**			Footprint SF	0%	$19.34	$0	0%	$0	
A1030	Slab-on-Grade	**YES**	***5***	110000	Footprint SF	92%	$5.11	$562,100	2%	$11,242	
A20	***Basement***										
A2020	Basement Wall Structures	**YES**	***5***	6200	Affected SF	5%	$20.45	$126,790	2%	$2,536	
B. Structure and Shell											
B10	***Superstructure***										
B1010	Elevated Floor Structures	**YES**	***5***	9974	Affected SF	8%	$21.14	$210,850	2%	$4,217	
B1020	Roof Structural System	**YES**	***5***	110,000	Footprint SF	92%	$14.72	$1,619,200	2%	$32,384	
B20	***Exterior Enclosure***										
B2010	Exterior Walls	**YES**	***5***	119,974	Gross BLDG SF	100%	$10.93	$1,311,316	2%	$26,226	
B2020	Windows	**YES**	***3***	119,974	Gross BLDG SF	100%	$8.04	$964,591	33%	$318,315	
B2030	Doors	**YES**	***3***	119,974	Gross BLDG SF	100%	$0.51	$61,187	33%	$20,192	
B30	***Roofing***										
B3010	Roof Coverings	**YES**	***4***	110,000	Footprint SF	92%	$10.36	$1,139,600	10%	$113,960	
C. Interiors											
C10	***Interior Construction***										
C1010	Partitions	**YES**	***3***	119,974	Gross BLDG SF	100%	$5.80	$695,849	33%	$229,630	
C1020	Interior Doors	**YES**	***2***	119,974	Gross BLDG SF	100%	$1.71	$205,156	75%	$153,867	
C1030	Misc. Interior Specialities	**YES**	***2***	119,974	Gross BLDG SF	100%	$1.19	$142,769	75%	$107,077	
C20	***Stairs/Fire Escapes***										
C2010	Stair Construction	**YES**	***5***	119,974	Gross BLDG SF	100%	$0.84	$101,147	2%	$2,023	
C2020	Stair Finishes	**YES**	***3***	119,974	Gross BLDG SF	100%	$0.34	$40,688	33%	$13,427	
C30	***Interior Finishes***										
C3010	Walls	**YES**	***3***	119,974	Gross BLDG SF	100%	$3.22	$386,316	33%	$127,484	
C3020	Floors	**YES**	***3***	119,974	Gross BLDG SF	100%	$6.65	$797,827	33%	$263,283	
C3030	Ceilings	**YES**	***3***	119,974	Gross BLDG SF	100%	$6.86	$823,022	33%	$271,597	

Wyoming School Facilities Department - Facility Condition Assessment
Draft Component Scores - Example Automated Calculation Worksheet

District: **District No.**
School No.: **School ID**
School Name: **School Name**
School Type **High School**
Const. Date: **1971**

Date Surveyed: **1/1/2012**
Surveyor: **Surveyor Name**
Reported SF: **120000** Footprint
Calculated SF: **119974** 110000

Systems and Assemblies		Present	Condition Rating	Applied Quantity	Applied Units	Calc % of BLDG SF	Unit Cost	CRV	DM %	DM Value	Field Notes
D. Services											
D10	***Elevators (Conveying Systems)***										
D1010	Elevators	**YES**	***3***	2	*Each*	0%	$89,000.00	$178,000	33%	$58,740	
D1013	Lifts	**YES**	***3***	1	*Each*	0%	$16,150.00	$16,150	33%	$5,330	
D20	***Plumbing***										
D2010	Plumbing Fixtures	**YES**	***3***	119,974	Gross BLDG SF	100%	$0.75	$89,981	33%	$29,694	
D2020	Domestic Water Dist.	**YES**	***3***	119,974	Gross BLDG SF	100%	$5.31	$637,062	33%	$210,230	
D2030	Sanitary Waste	**YES**	***3***	119,974	Gross BLDG SF	100%	$1.03	$123,573	33%	$40,779	
D2040	Stormwater Drainage	**YES**	***3***	110,000	Footprint SF	92%	$1.36	$149,600	33%	$49,368	
D30	***HVAC***										
D3010	Energy Supply	**YES**	***3***	119,974	Gross BLDG SF	100%	$0.75	$89,981	33%	$29,694	
D3011	Geothermal Heating/Cooling Supply	**NO**			Affected SF	0%	$3.90	$0	0%	$0	
D3020	Central Plant - Heating	**YES**	***3***	119,974	Affected SF	100%	$3.55	$425,908	33%	$140,550	
D3030	Central Plant - Cooling	**NO**			Affected SF	0%	$6.06	$0	0%	$0	
D3040	Central Plant Distribution Systems	**YES**	***3***	119,974	Affected SF	100%	$7.10	$851,815	33%	$281,099	*SF must be determined by composite of heating and cooling SF. When geothermal selected, both heating and cooling distribution used to reflect costs of heat pumps. When RTU's with DX cooling are served by hot water loop, both heating and cooling distribution used to reflect costs of RTU system. Unit cost is a blend of cost/sf based on applied quantities*
D3040A	Central Plant Distribution Systems - Heat Only	**YES**	***3***	119,974	Affected SF	100%	$7.10	$851,815	33%	$281,099	*CRV and DM Value from this row subtracted from totals at bottom of spreadsheet*
D3040B	Central Plant Distribution Systems -Cooling Only	**NO**		0	Affected SF	0%	$6.06	$0	0%	$0	*CRV and DM Value from this row subtracted from totals at bottom of spreadsheet*
D3050	Split Systems/Package Units	**YES**	***2***	9,455	Affected SF	100%	$19.70	$186,260	75%	$139,695	
D3053	Swamp Coolers/Window Units	**YES**	***2***	43,851	Affected SF	100%	$3.00	$131,554	75%	$98,665	
D3060	Controls	**YES**	***2***	119,974	SF of HVAC systems	100%	$2.00	$239,948	75%	$179,961	
D40	***Fire Protection***										
D4010	Sprinklers	**YES**	***3***	119,974	Affected SF	100%	$2.71	$325,130	33%	$107,293	
D4020	Standpipes	**NO**			Affected SF	0%	$0.32	$0	0%	$0	
D4030	Alarms	**YES**	***4***	119,974	Affected SF	100%	$2.00	$239,348	10%	$23,935	

Wyoming School Facilities Department - Facility Condition Assessment
Draft Component Scores - Example Automated Calculation Worksheet

District: **District No.**
School No.: **School ID**
School Name: **School Name**
School Type **High School**
Const. Date: **1971**

Date Surveyed: **1/1/2012**
Surveyor: **Surveyor Name**
Reported SF: **120000** Footprint
Calculated SF: **119974** 110000

Systems and Assemblies		Present	Condition Rating	Applied Quantity	Applied Units	Calc % of BLDG SF	Unit Cost	CRV	DM %	DM Value	Field Notes
D50	***Electrical***										
D5010	Service and Distribution	**YES**	***4***	119,974	Gross BLDG SF	100%	$8.84	$1,060,870	10%	$106,087	
D5020	Lighting	**YES**	***3***	119,974	Gross BLDG SF	100%	$2.48	$297,236	33%	$98,088	
D5030	Communication/Security	**YES**	***3***	119,974	Gross BLDG SF	100%	$3.57	$428,307	33%	$141,341	
D5040	Emergency Power	**YES**	***4***	110,000	Gross BLDG SF	100%	$0.59	$64,900	10%	$6,490	
E. Equipment and Furnishings											
E10	***Equipment***										
E1020	Institutional Equipment	**YES**	***3***	119,974	Gross BLDG SF	100%	$1.82	$218,353	33%	$72,056	
E1090	Kitchen Equipment	**YES**	***3***	119,974	Gross BLDG SF	100%	$0.45	$53,610	33%	$17,691	
E20	***Furnishings***										
E2010	Fixed Furnishings	**YES**	***3***	119,974	Gross BLDG SF	100%	$7.60	$911,802	33%	$300,895	
F. Special Construction and Demolition											
F10	***Special Construction***										
F1010	Greenhouses/Aquaculture	**YES**	***1***	350	Affected SF	0.292%	$12.04	$4,215	100%	$4,215	
F1020	Integrated Construction										
F1021	Gymnasiums w/locker rms	**YES**	***3***	36,536	Affected SF	30%	$57.75	$2,109,954	33%	$696,285	
F1022	Auditorium	**YES**	***3***	7,042	Affected SF	0%	$75.20	$529,558	33%	$174,754	
F1023	Multi-purpose Rooms	**YES**	***3***	2,303	Affected SF	2%	$42.50	$97,878	33%	$32,300	
F1024	Planetariums	**NO**			Affected SF	0%	$30.00	$0	0%	$0	
F1040	Aquatic Facilities	**NO**			Affected SF	0%	$86.40	$0	0%	$0	
G. Site Systems											
G20	***Site Improvements***										
G2011	Pavements	**YES**	***4***								*Generally in good to fair condition.*
G2030	Sidewalks	**YES**	***4***								*System score based on age.*

Total CRV **$19,711,999** Total DM **$4,763,946**

FCI		**0.242**	

Wyoming School Facilities Department - Facility Condition Assessment
Draft Component Scores - Example Automated Calculation Worksheet

District: **District No.**
School No.: **School ID**
School Name: **School Name**
School Type **High School**
Const. Date: **1971**

Date Surveyed: **1/1/2012**
Surveyor: **Surveyor Name**
Reported SF: **120000** Footprint
Calculated SF: **119974** 110000

Facility Condition Needs Index:

ILLUMINATION		Quantity	Units	Net CRV Change		Net DM Change	Notes
Square footage with insufficient lighting		83181	SF	$206,082		$ 206,082	

CRV is SF quantity *Unit cost from D5020

ELECTRICAL CAPACITY	Provided Amps	ϕ	Voltage	Watts / SF	Sufficient Power Provided	Quantity	Net CRV Change		Net DM Change	Notes		% premium increase for electrical capacity
Provided Electrical Capacity	2000	3	208	4.80	**NO**	119974	$0		$1,485,218			50%
Recommended Capacity Range				>9.5								

								% of system affected	SF of classroom	Ratio of Classroom to GSF	
Is sufficient capacity provided to each classroom?	Defined as minimum two duplex circuits per classroom	**NO**	0	$0		$0	Cost to upgrade included with service upgrade.	80%	82729	0.689558	33%
Added CRV & DM Costs				$0	$0		Used to calculate DM costs when sufficient power is provided				
Subtracted FCI Costs				$0	$0		Used to subtrate the portion of the portion of defered maintenance associated with the classrooms.				
Is sufficient distribution provided?	Defined as generally two duplex outlets per classroom wall, 6 to 8 per classroom	**NO**	0	$0		$0	Cost to upgrade included with service upgrade.	40%	82729	0.689558	33%
Added CRV & DM Costs				$0	$0		Used to calculate DM costs when sufficient power is provided and sufficient capacity to each classroom				
Subtracted FCI Costs				$0	$0						
Are multiple lighting zones/controls provided?	Defined as ability to control lighting levels in classroom	**NO**	82729	$0		$102,481		50%	82729		
			Total Net CRV Change-Power	$0	**Total Net DM Change-Power**	$1,587,699					

Wyoming School Facilities Department - Facility Condition Assessment
Draft Component Scores - Example Automated Calculation Worksheet

District: **District No.**
School No.: **School ID**
School Name: **School Name**
School Type **High School**
Const. Date: **1971**

Date Surveyed: **1/1/2012**
Surveyor: **Surveyor Name**
Reported SF: **120000** Footprint
Calculated SF: **119974** 110000

HVAC SYSTEMS	
Does existing system provide the following:	**Answers (Yes/No)**
Heating to all areas?	**YES**
Cooling to all areas except gyms/multi-purpose rooms?	**NO**
Sufficient outside air provided to classrooms, laboratories, and instructional spaces.	**YES**
Independent HVAC control provided to each classroom	**YES**
Is the existing system filtered?	**YES**
Monitor/control humidity in the facility	**NO**

		Comments for components that can be modified
Can the existing system be modified to provide the following:	**Answers (Yes/No/NA)**	
Heating to all areas?	**NA**	
Cooling to all areas except gyms/multi-	**NO**	
Sufficient outside air provided through mechanical ventilation	**NA**	
Independent HVAC control provided to each classroom	**NA**	
Filtration	**NA**	

	Notes	**Quantity**	**Units**	**Unit Cost**	**Total**
Suggested System Modification/Upgrade	New roof top package units with supply & return ducts providing heating, cooling, and outside air	81,135	GSF	$35.26	$ 2,861,210

Total Net CRV Change - HVAC	$2,861,210	**Total Net DM Change - HVAC**	$2,861,210
Total CRV	**$22,779,291**	**Total DM**	**$9,418,936**
FCNI		**0.413**	

1	New roof top package units with supply & return ducts providing heating, cooling, and outside air	$35.26	$35.26	Package unit cost
2	Add DX Coils to all existing AHUs	$10.39	40%	Celings
			10%	roof
			2%	Partitions
			50%	premium

Appendix B

Light Level Standards

Light Measurement Standard Research
Comparison Table

ROOM TYPE CLASSIFICATION	FEA suggested Evaluation Standard	WSFD 2010 DESIGN GUIDELINES		IESNA		
		RECOMMENDED DESIGN FOOTCANDLES DIRECT LIGHTING	RECOMMENDED DESIGN FOOTCANDLES INDIRECT LIGHTING	Cummulative Affect	Horizontal Footcandles	Vertical Footcandles
ADMINISTRATIVE						
Offices/Receptionist	40	50	40			
Storage Rooms	25	25	25			
Restrooms	25	25-30	25-30			
Conference/Resource Rooms	40	50	40			
Health Clinic	40	50	40			
Teacher Prep/Workroom	40	50	40			
EDUCATIONAL						
CLASSROOMS						
CLASSROOMS-GENERAL	40	50	40	111.80	100	50
Art Rooms/Kiln	40	50	40	58.31	50	30
Modular Technology Labs	40	50	40			
CADD Labs	30	30	30	10.44	10	3
Industrial Tech/Production Labs	50	60	60			
Computer Labs	40	40	40			
Graphics Labs	40	50	40	30.15	30	3
Life Skills Labs	40	50	50			
Science Labs	40	50	50			
Music Rooms	40	50	40			
Large Group Instruction Rooms	40	50	40			
Corridors / Common / Circulation	10	??	??		10	
Cafeteria	40	??	??	10.44	10	3
MEDIA CENTER						
Active Areas	40	50	40	42.43	30	30
Inactive Areas	25	40	40	30.41	30	5
SUPPORT AREAS						
Laundry Rooms	25	25	25			
Kitchen-Cafeteria	50	??	??	50.09	50	3
ATHLETIC AREAS						
Gymnasium - Elementary School	65	75	60			
Gymnasium - Middle School	65	75	60			
Gymnasium - High School	80	100	60	104.40	100	30
Multi-use P.E. Rooms	40	50	10			
Locker Rooms	25	25	25			
STUDENT DINING						
Assembly	40	20	20			
Stage/Work Lights	20	20	-			
Make-up/Dressing Rooms	40	50	-			
Theatrical Control Room	20	30	-			

FEA proposed Lighting Standards for Existing Facilities (RLSEF) are based on both the 2010 recommended Design Guidelines and the IESNA Lighting Handbook. Both references apply to new construction and not an existing facility in operation with no upgrade or refurbishment planned. Actual categories will need to be expanded to reflect category, type and use in each room.

Minimum Light Measurements

Field Standards for Data Collection

CATEGORY	TYPE	USE	MINIMUM LIGHT LEVEL [Footcandles]
Education	Classroom	Pre-K Classroom	40
Education	Classroom	Kindergarten Classroom	40
Education	Classroom	Primary Classroom (grades 1-3)	40
Education	Classroom	Intermediate Classroom (grades 4-5/6)	40
Education	Classroom	MS/HS Classroom	40
Education	Classroom	Open-Plan Instruction Space ES	40
Education	Classroom	Open-Plan Instruction Space MS/HS	40
Education	Classroom	Science Demonstration Classroom ES/MS/HS	40
Education	Classroom	Tutoring/Small Group/Resource Room	40
Education	Classroom	Special Education - Self-Contained General Ed Classroom	40
Education	Classroom	Special Education - Specialized Self-Contained Classroom	40
Education	Classroom	Special Education - Special Vocational Programs/Life Skills	40
Education	Classroom	Special Education Resource Room	40
Education	Classroom	Gymnasium	40
Education	Classroom	Multipurpose/P.E.	40
Education	Classroom	Classroom - OTHER	40
Education	Classroom	Temporary - Modular	40
Education	Laboratory	Computer Laboratory	40
Education	Laboratory	Art Classroom	40
Education	Laboratory	Music Classroom	40
Education	Laboratory	Vocal Music Classroom MS/HS	40
Education	Laboratory	Band Room MS/HS	40
Education	Laboratory	Orchestra Room MS/HS	40
Education	Laboratory	Drama Classroom / Black Box Theater	40
Education	Laboratory	General Science Laboratory MS/HS	50
Education	Laboratory	Biology Laboratory	50
Education	Laboratory	Physics Laboratory	50
Education	Laboratory	Chemistry Laboratory	50
Education	Laboratory	Science Laboratory Prep Room/Storage	40
Education	Laboratory	Foreign Language/Multi-Lingual Laboratory	40
Education	Laboratory	Vocational/CTE - Industrial Education Laboratory	40
Education	Laboratory	Vocational/CTE - General Laboratory	40
Education	Laboratory	Family and Consumer Sciences (FACS) Kitchen/Food Prep	40
Education	Laboratory	Health Occupations Education Laboratory	40
Education	Laboratory	Early Child Care	40
Education	Laboratory	Agricultural Education Laboratory/Greenhouse	40
Education	Laboratory	Firing Range (Indoor)	40
Education	Laboratory	PT/OT Laboratory	40
Education	Laboratory	Audiology Laboratory	40
Education	Laboratory	TV/Radio; Video/CCTV/Media Production Studio	40
Education	Laboratory	Lab Space - OTHER	40
Education Support	Instructional Support	Multi-Use/Cluster Space	40
Education Support	Instructional Support	Observation/Diagnostician Booth	40
Education Support	Instructional Support	In School Suspension Or Detention Room; Time Out Room	40
Education Support	Instructional Support	Ensemble	40
Education Support	Instructional Support	Practice room	40
Education Support	Instructional Support	Recording Room	40
Education Support	Instructional Support	Instrument Repair Room	40
Education Support	Instructional Support	Music Library	40
Education Support	Instructional Support	Other Music Space	40
Education Support	Instructional Support	Darkroom	40
Education Support	Instructional Support	Kiln	40
Education Support	Instructional Support	Testing	40
Education Support	Instructional Support	Display Space	40
Education Support	Instructional Support	Classroom (Related to Vocational Instruction)	40
Education Support	Instructional Support	Vocational Laboratory Support Space	40
Education Support	Instructional Support	Student Activities Area	40
Education Support	Instructional Support	Video/CCTV Control Room	40
Education Support	Instructional Support	Armory	40
Education Support	Library/Media Center	Library/Media Center	40
Education Support	Library/Media Center	Library Workroom/Office	40
Education Support	Library/Media Center	Audio-Visual, Library-Medial Storage Area	40

Minimum Light Measurements

Field Standards for Data Collection

CATEGORY	TYPE	USE	MINIMUM LIGHT LEVEL [Footcandles]
Education Support	Library/Media Center	Library Conference Room	40
Education Support	Library/Media Center	Library Instruction Room	40
Education Support	Assembly	Auditorium / Assembly	20
Education Support	Assembly	Stage	20
Education Support	Assembly	Stage/Drama/Auditorium Storage	20
Education Support	Assembly	Balcony Seating	20
Education Support	Assembly	Other Drama/Assembly Space	20
Education Support	Assembly	Drama Shop/Stagecraft Workroom	40
Education Support	Assembly	Dressing Room - Girls	40
Education Support	Assembly	Dressing Room - Boys	40
Education Support	Assembly	Dressing Room - Unisex	40
Education Support	Assembly	Control Booth/Projection Room	40
Education Support	Assembly	Concessions	40
Education Support	Assembly	Ticket Booth	40
Education Support	Student Dining	Dining Area / Cafeteria	40
Education Support	Student Dining	Kitchen And Serving Area	50
Education Support	Student Dining	Kitchen Storage Area	25
Education Support	Student Dining	Table and Chair and Equipment Storage	25
Education Support	Student Dining	Other Food Service	40
Education Support	Student Dining	Satellite or Central Kitchen (off-site)	50
Education Support	Physical Education	Gymnasium	50
Education Support	Physical Education	Auxiliary Gym	40
Education Support	Physical Education	Coach/Instructor Office	40
Education Support	Physical Education	P.E. Storage	25
Education Support	Physical Education	Equipment Room	25
Education Support	Physical Education	Classroom	40
Education Support	Physical Education	Instructional Prep/Workroom	40
Education Support	Physical Education	Multipurpose/P.E.	40
Education Support	Physical Education	Dance/Aerobics	40
Education Support	Physical Education	Weight Room	40
Education Support	Physical Education	Athletic Seating (Bleachers)	20
Education Support	Physical Education	Physical Therapy Training Room	40
Education Support	Physical Education	First Aid	40
Education Support	Physical Education	Laundry/Towel Distribution	25
Education Support	Physical Education	Lockers/Dressing/Toilets/Showers - Girls	25
Education Support	Physical Education	Lockers/Dressing/Toilets/Showers - Boys	25
Education Support	Physical Education	Lockers/Dressing/Toilets/Showers - Staff	25
Education Support	Physical Education	Other Physical Education Space	40
Non-Education	Physical Education	Pool	40
Non-Education	Administration	Office, Principal/Director	40
Non-Education	Administration	Office, Assistant Principal	40
Non-Education	Administration	Office, Other Administration/Staff	40
Non-Education	Administration	Secretarial Space, Open Office	40
Non-Education	Administration	Reception/Waiting Area	40
Non-Education	Administration	Counselor Office	40
Non-Education	Administration	Workroom/Mail/Copy	40
Non-Education	Administration	Conference Room	40
Non-Education	Administration	Health Clinic/Nurse's Office	40
Non-Education	Administration	Administrative Storage	25
Non-Education	Administration	School Store	40
Non-Education	Administration	Main Distribution Frame Room	40
Non-Education	Administration	Intermediate Distribution Frame Room	40
Non-Education	Administration	Multi-Use/Community Room	40
Non-Education	Administration	Teacher Lounge/Dining	40
Non-Education	Administration	Teacher Planning/Workroom	40
Non-Education	Administration	Superintendent's Office	40
Non-Education	Administration	Conference Room	40
Non-Education	Administration	Superintendent's Secretary	40
Non-Education	Administration	Multiple Clerk/Secretarial Office	40
Non-Education	Administration	Ancillary Reception Area	40
Non-Education	Administration	Vault	25
Non-Education	Administration	Assistant Superintendent's Office	40

Minimum Light Measurements

Field Standards for Data Collection

CATEGORY	TYPE	USE	MINIMUM LIGHT LEVEL [Footcandles]
Non-Education	Administration	Other Administrative Offices	40
Non-Education	Administration	Business Operations Working Area	40
Non-Education	Administration	Terminal And Storage Area	25
Non-Education	Administration	School Plant Planning	40
Non-Education	Administration	Word Processing Center	40
Non-Education	Administration	Personnel Services - Includes Work Area	40
Non-Education	Administration	Central Reproduction and Copy Area	40
Non-Education	Administration	Central Administrative Supply Area	25
Non-Education	Administration	Administrative Mail Room	40
Non-Education	Administration	Central Security Office	40
Non-Education	Administration	Board Meeting Room	40
Non-Education	Administration	Ancillary Staff Lounge	40
Non-Education	Administration	Main Lobby and Switchboard	40
Non-Education	Administration	Director's Office	40
Non-Education	Administration	Assistant Director's Office	40
Non-Education	Administration	General Office/Secretary	40
Non-Education	Administration	Staff Development/Instructional	40
Non-Education	Administration	Other Ancillary Administrative Support	40
Non-Education	Administration	Programmer Room	40
Non-Education	Administration	Data Processing Technical Manuals and Tools	40
Non-Education	Administration	Data Processing Equipment and Materials	40
Non-Education	Administration	Computer Room (raised floor)	40
Non-Education	Administration	Off-line Equipment Room	40
Non-Education	Administration	Other Central Equipment Support	40
Non-Education	Administration	Library Warehouse/Stacks	40
Non-Education	Administration	Reference	40
Non-Education	Administration	Professional Library	40
Non-Education	Administration	Periodical/Journal Services	40
Non-Education	Administration	Central Media Processing	40
Non-Education	Administration	Audio Visual Equipment	40
Non-Education	Administration	Closed Circuit TV laboratory	40
Non-Education	Administration	Closed Circuit Support	40
Non-Education	Administration	Media Production Laboratory	40
Non-Education	Administration	Media Copying Room	40
Non-Education	Administration	Media Maintenance/Repair	40
Non-Education	Administration	Ancillary Media Storage	25
Non-Education	Administration	Other Ancillary Media Space	40
Non-Education	Assigned Storage	Storage - Instructional Supplies/Equipment (Textbook/Computers/Robe/Uniform/Instruments)	25
Non-Education	Assigned Storage	Storage - Ancillary Administrative and Support Storage Area	25
Non-Education	Assigned Storage	Storage - Hazardous or Flammable Material	25
Non-Education	Assigned Storage	Student Lockers	n/a
Non-Education	Assigned Storage	Other Storage	25
Non-Education	Public Restrooms	Students - Restrooms/Bath - Girls	25
Non-Education	Public Restrooms	Students - Restrooms/Bath - Boys	25
Non-Education	Public Restrooms	Students - Restrooms/Bath - Unisex	25
Non-Education	Public Restrooms	Staff - Lockers, Restroom, and/or Shower	25
Non-Education	Horizontal Circulation	Inside Circulation Area	10
Non-Education	Horizontal Circulation	Lobby/Common Area	10
Non-Education	Vertical Circulation	Stairs	10
Non-Education	Vertical Circulation	Elevator, Freight/Passenger	10
Non-Education	Vertical Circulation	Elevator, Passenger/Handicapped	10
Non-Education	Building Support	Custodial - Closet, Storage, Workroom	25
Non-Education	Building Support	Mechanical Room	25
Non-Education	Building Support	Mechanical Tunnel	25
Non-Education	Building Support	Electrical Room	25
Non-Education	Building Support	Telephone Equip/Communications Closet	25
Non-Education	Building Support	Storage, Maintenance/Custodial	25

Appendix C

Unit Cost Derivation for HVAC Upgrades

UNIT COST DERIVATION FOR HVAC UPGRADES

Our approach to calculating the cost for upgrading the HVAC systems to generally meet modern standards for thermal comfort (heating, cooling, and control), filtration, and outside air levels was to first determine what types of mechanical systems were present in each facility. During the assessment, our assessors recorded the type, make-up, and areas served by each type of mechanical system within the facilities.

If the existing system did not provide cooling to all areas except for gyms, multi-purpose rooms, and aquatic facilities, the assessors were to provide their judgment on how best to upgrade/replace the current system. This approach varied from inserting new cooling coils into existing heat only air handlers to new multi-zone ducted roof top package units to individual split systems serving single rooms. For issues associated with outside air, filtration, and system control, the assessors were to provide their opinions on how the existing systems could be modified. Note that the exception for gyms, multi-purpose rooms, and aquatic facilities was based on current WSFD policies that cooling in those room categories is considered an enhancement.

The following list of options was provided to each assessor to select what they thought would best serve the facility to provide heating and cooling to all areas, taking into account wall types and structural configurations.

Modification:

1. Provide new cooling coils with remote DX condensing units into existing air handler systems. Assumes central plant heating with ducted delivery.
2. Provide new piping system and remote cooling tower/chiller system feeding new coils into the existing delivery system for the heating system.

New Systems:

3. Roof top package units with supply & return ducts running down common corridor - above existing ceiling
4. Roof top package units with supply & return ducts running down common corridor - below existing ceiling
5. Roof top package units with supply & return ducts running in classroom adjacent to common corridor above existing ceiling level
6. Roof top package units with supply & return ducts running in classroom adjacent to common corridor using furdowns
7. Roof top package units with supply & return ducts serving single classroom
8. Roof top package units with supply & return ducts split between multiple classrooms
9. Roof top package units with external supply & return ducts on roof
10. New central plant with piping and AHUs above ceiling in hallways
11. New central plant with piping and AHUs above ceiling in classrooms
12. New central plant with piping and AHUs in furdowns in classrooms
13. New central plant with external roof-top piping and interior AHUs in furdowns in classrooms

Based on the judgment calls provided by the assessors, Options 2, and 10 through 13 were never selected. The majority of the opinions used Option 1 for existing central plant systems that had ducted air handlers and options 3 through 6, depending on wall and ceiling configurations. Option 7 and 8 were typically only selected with timber framed structures that the assessors were concerned on the ability of the roof framing system to support the additional loads.

To determine costs, FEA developed a typical cost per square foot using the unit costs associated with each of the different types of educational facilities. Those elements included roof system, ceiling finishes, wall finishes, partitions, and HVAC units. For the options, we used a proto-typical model to apply each of the options for comparison purposes. The table below shows how each was calculated:

Building Assumptions:

Building GSF	18100	SF
Primary Hallway areas	2500	SF
Gym/MPRs	2300	SF
Classrooms, laboratories, and instructional support areas.	8000	SF

Units costs for an elementary school

Element	Description		
B3010	Roof Coverings	$/SF	$ 10.36
C1010	Partitions	$/GSF	$ 4.83
C3030	Ceilings	$/GSF	$ 6.86
D3050	Self-Contained / Package Units	$/GSF	$ 19.70

Option	**Description of assumptions** - Primary assumption is that only classrooms, laboratories, and instructional support areas require heating and cooling.	Package Unit cost	Classroom SF	Ceiling cost - GSF	Hallway SF	Partition Cost	Partition SF Modifier	Roof Cost	Roof SF Area	Total Cost/SF for GSF
Roof top package units with supply & return ducts running down common corridor - above existing ceiling	Assumed cost for package units plus the ceiling replacement cost for the common hallways. Add 10% of SF of hallway for partitions for holes in demising walls	$ 19.70	8,000	$ 6.86	2,500	4.83	250			$ 21.99
Roof top package units with supply & return ducts running down common corridor - below existing ceiling	Assumed cost for package units plus the new ceiling in common hallway. Use an additional 50% for removal of existing ceiling. Add 10% of SF of hallway for partitions for holes in demising walls	$ 19.70	8,000	$ 6.86	3,750	4.83	250			$ 23.07
Roof top package units with supply & return ducts running in classroom adjacent to common corridor above existing ceiling level	Assumed cost for package units plus twice the ceiling replacement cost for the common hallways. Add 10% of SF of hallway for partitions for holes in demising walls	$ 19.70	8,000	$ 6.86	5,000	$ 4.83	250			$ 24.14
Roof top package units with supply & return ducts running in classroom adjacent to common corridor using furdowns	Assumed cost for package units plus twice the ceiling replacement cost for the common hallways. Use 50% of one additional ceilng sq ft to account for removal of existing ceiling. Add 10% of SF of hallway for partitions for	$ 19.70	8,000	$ 6.86	6,250	$ 4.83	250			$ 25.21
Roof top package units serving single classroom	Assumed package unit with localized ductwork (90% of cost) plus 50% of ceiling finishes in classroom areas, plus 20% of SF for Roof areas of classroom areas	$ 17.73	8,000	$ 6.86	800			$ 10.36	800	$ 19.45
Roof top package units with supply & return ducts split between multiple classrooms	Assumed package unit with ductwork plus 50% of ceiling finishes in classroom areas, plus 20% of SF for Roof areas of classroom areas. Add 10% of SF of hallway for partitions for holes in demising walls	$ 19.70	8,000	$ 6.86	800	$ 4.83	250	$ 10.36	800	$ 21.57

As observed above, the unit costs generally fell between $22 and $25.25 for the ducted systems and from $19.50 to $21.50 for single units serving one or two classrooms. The differences from the most expensive to the least expensive for each grouping is approximately 10% which, based on the very general assumptions, lack of design information, and assumed building configuration, is considered to be generally equivalent. As such, we simplified the approach with resulted in two final options (formulas and assumptions shown below):

1. **New package units with supply & return ducts providing heating, cooling, and outside air**

   Assumptions:
   - Ducted package units would be required
   - 40% of all ceiling area would be removed/reinstalled
   - Holes in partition walls would occur and was estimated at 2% of the GSF of the building.
   - 10% of the existing roof areas would be affected by the new units
   - 50% premium upcharge used to reflect significant areas disturbed as well as not performing the work as part of a major renovation.

   $$UC_{Upgrade} = (UC_{HVAC} + (UC_{Ceiling}*40\%) + (UC_{Partitions}*2\%) + (UC_{Roofing}*10\%* SF_{Roofing}/GSF))*1.5$$

   Where:

   $UC_{Upgrade}$ = Upgrade Cost for HVAC Systems

   UC_{HVAC} = Unit cost for building specific split system/package units from FCI cost tables (D3050)

   $UC_{Ceiling}$ = Unit cost for ceiling finishes from FCI cost tables (C3030).

   $UC_{Partitions}$ = Unit cost for building specific partitions from FCI Cost tables (C1010).

   $UC_{Roofing}$ = Unit cost for building specific roofing systems from FCI Cost tables (B3010).

   $SF_{Roofing}$ = Square footage of entire roof footprint.

   GSF = Gross square footage of building.

2. **Add DX Coils to all existing AHUs**

   Assumptions:
   - Existing air handler system will accept new coils.
   - Control systems can be easily modified to accept cooling commands

   $$UC_{Upgrade} = UC_{Coils} * 1.5$$

   $UC_{Upgrade}$ = Upgrade Cost for HVAC Systems

   UC_{Coils} = Unit cost for adding new coils, controls, and exterior mounted condensing units (D3050A)

Total cost applied would be the $UC_{Upgrade}$ times the square footage of the building minus gyms, multi-purpose rooms, and aquatic facilities as well as those areas that were provided with adequate heating, cooling, and ventilations systems.

Appendix D

Space Measurement Procedures

SPACE MEASUREMENT PROCEDURES

General Site Visit Procedures

To fulfill the space measurement portion of this project, FEA sent teams of two individuals to measure each facility and the spaces that made up the facility. Length measurements were taken using the Leica DISTO™ laser distance meter, 25-foot tape measure, and a 100-foot tape measure. The measurements were obtained at interior spaces and around the full perimeter of the facilities. Interior and exterior wall thicknesses were also documented throughout the facility where they could be readily obtained. The teams obtained sufficient measurements at each facility so that the facility could be drawn in AutoCAD using only the field notes as the guide. Measurements were recorded on scanned floor plans of the facility using the PDF Expert application on the Apple iPad.

While gathering the space measurement data, the team also classified the room types based on available information and, when possible, input from the local personnel. Prior to entering, each space was given a room number, to identify that specific space. If the facility did not already have a numbering system in place or that was apparent to our team, the team followed a numbering guideline established by FEA at the beginning of the project.

Each team was equipped with a Motion touch-screen tablet by Intel, which was loaded with a spreadsheet of predetermined room types and uses. The field team input the room number associated with the space and selected the type and use from the drop down menu that best represented the space they were measuring. Additionally, while in the space, the team obtained light level readings using a hand held light meter by manufactured by Uni-T.

These general procedures were applied at each of the facilities surveyed throughout the state. Included in the remainder of this document are detailed descriptions, examples, and illustrations of various components included within the field effort. The intent of these sections is to clarify or explain our measurement and classification methods.

Typical Room Measurement

The laser distance meter (Disto) was placed with the back end of the Disto flat against one wall or surface and measured across to the opposite surface where the laser appears. All room measurements were obtained from the interior surface of each wall and rounded to the nearest inch. In square or rectangular rooms, the length and width measurement was sufficient. For rooms that were not square or rectangular, the length of each wall was recorded, as well as interior angles and cross room distances that would allow the room to be drawn using basic geometry. Examples of these cases can be found below in Figure 1 and Figure 2.

While measuring each room, interior column bump-outs and non accessible mechanical chases were not removed from the overall square footage of the space. Additionally, storage closets or built-in cabinets used by only that space were not removed from the overall square footage of the space. However, built-in bathrooms or storage not used for the main space were classified separately. Built-in lockers in hallways were measured, classified separately from the hallway, and assigned their own room or space designation. Examples of these cases are illustrated in Figure 3 thru Figure 6.

Figure 1: Rectangular Classroom

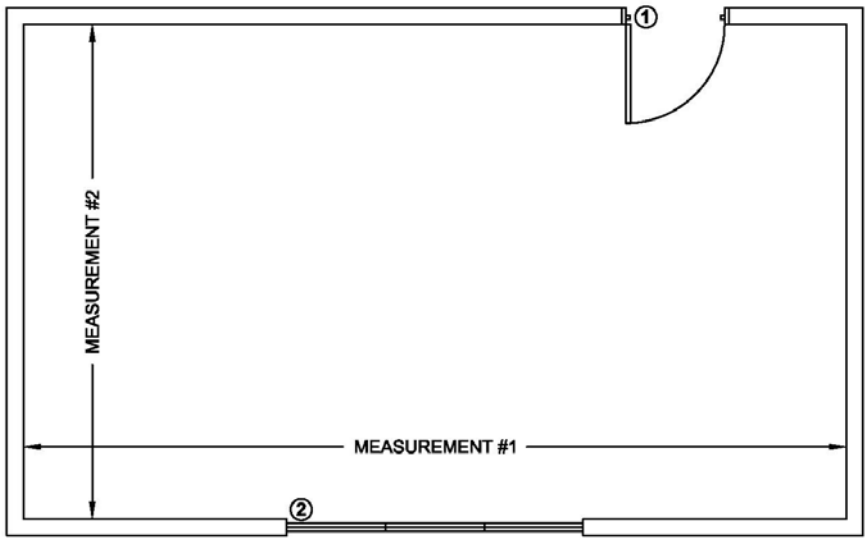

1. Width of interior walls typically measured at doorways.
2. Width of exterior walls can be measured at windows or doorways.

Figure 2: Non-rectangular Classroom

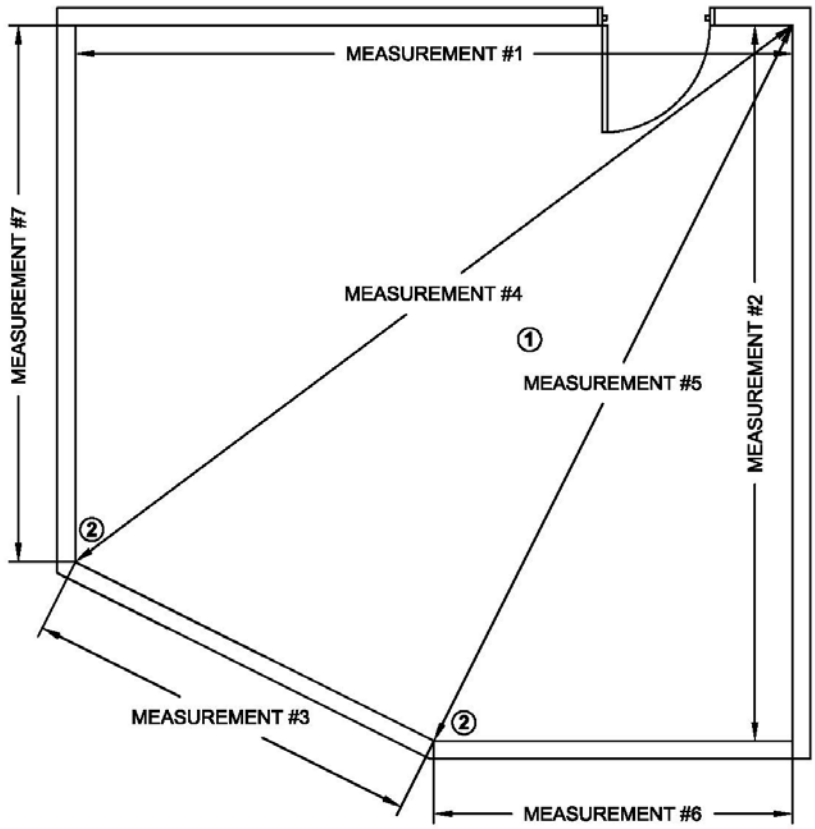

1. Measure diagonal segments such that the room can be drawn using basic geometry.
2. If possible, measure interior angles for confirmation.

Figure 3: Classroom with Column Bump-out and Space-Specific Closet

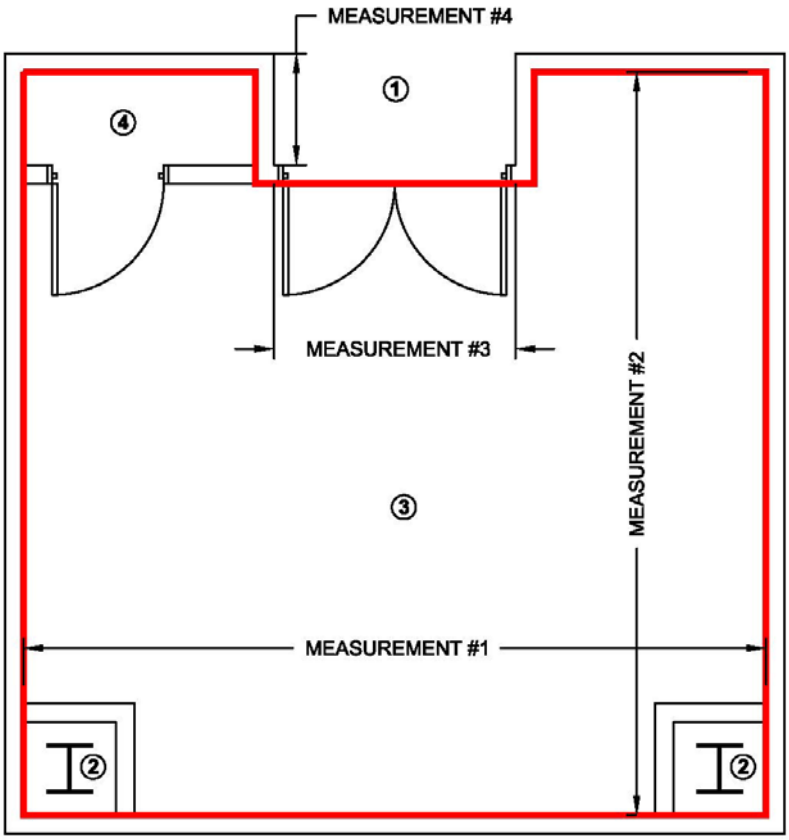

1. The area in front of a recessed doorway is measured and counted as part of the area outside (typically a hallway) of the space.
2. Column bump-outs were not measured or removed from the overall square footage of the space.
3. The main space is measured as a rectangle.
4. This space is included in the main space if the closet is used specifically for the main space.

The total square footage of this space is shown by the area outlined in red.

Note that the walls will only be reflected in the gross square footage.

Figure 4: Classroom with Column Bump-out and Non-Space-Specific Closet

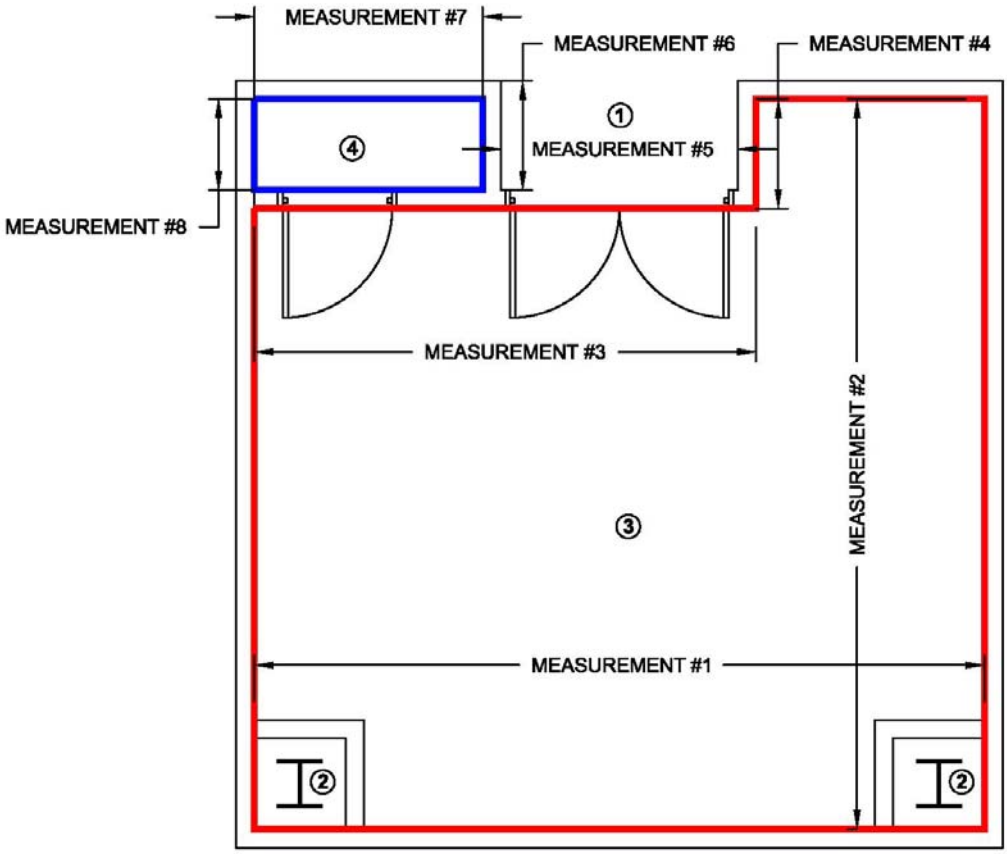

1. The area in front of a recessed doorway is measured and counted as part of the area outside (typically a hallway) of the space.
2. Column bump-outs were not measured or removed from the overall square footage of the space.
3. The main space is measured as a rectangle.
4. If this space is not used by the main space (example: IT closet in a general classroom) then it is counted as its own space with its own square footage

The total square footage of the main space is shown by the red outline and the total square footage of the non-space-specific closet space is shown by the blue outline.

Note that the walls will only be reflected in the gross square footage.

Figure 5: Classroom with Bathroom and Mechanical Chase

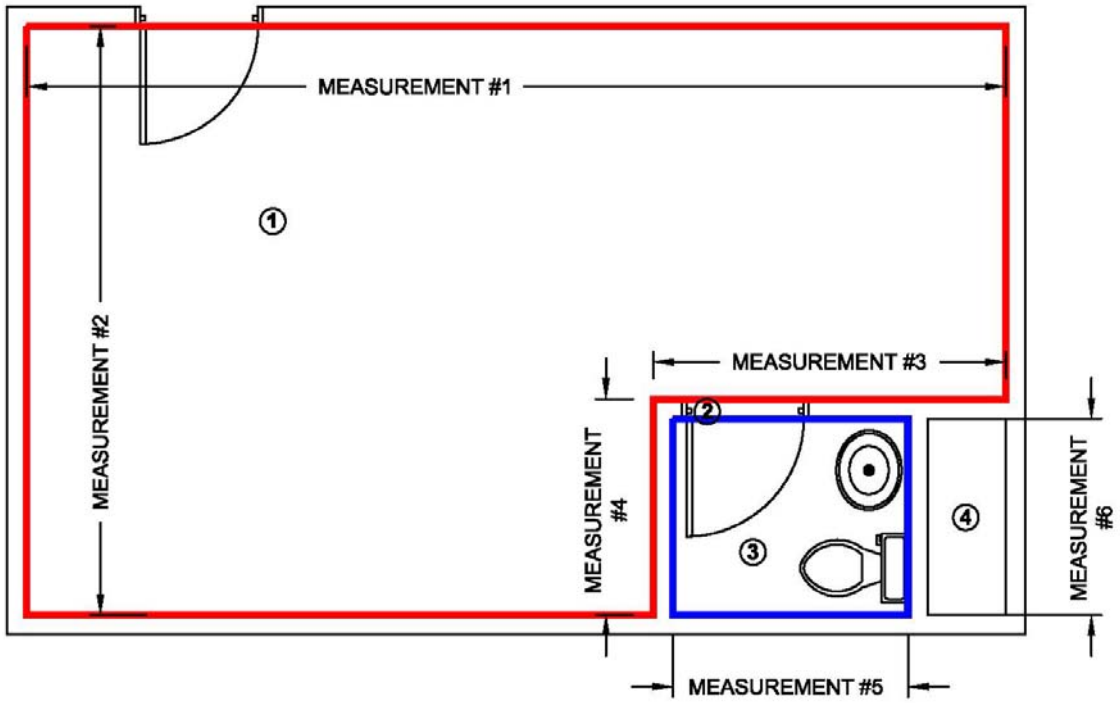

1. Measure and classify the main space.
2. Obtain wall thickness at the doorway as usual.
3. Measure the restroom and classify it as a separate space.
4. The plumbing/mechanical chase is not accessible and not measured or included in the overall square footage of either the main space or the restroom. This area is included in the building gross square footage.

The total square footage of the main space is shown by the red outline and the total square footage of the bathroom is shown by the blue outline.

Note that the walls and the plumbing/mechanical chase will only be reflected in the gross square footage.

Figure 6: Hallway with Built-In Lockers

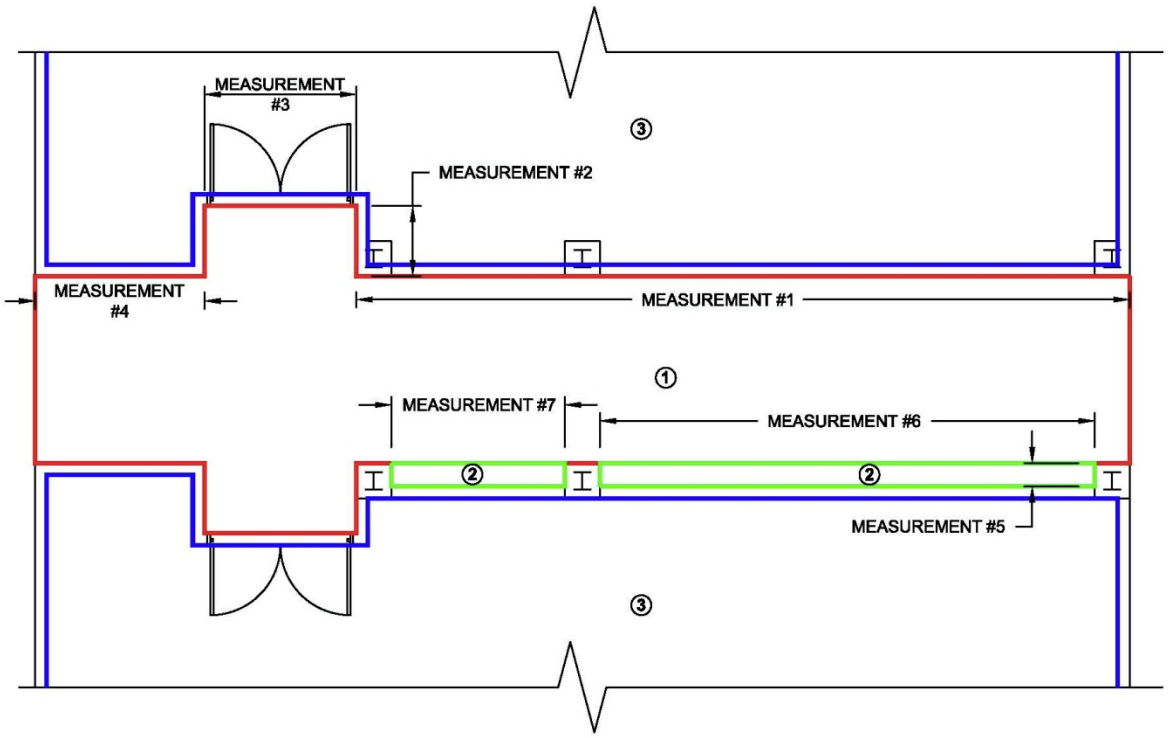

1. The overall hallway measured and classified as horizontal circulation (outlined in red).
2. The built-in lockers measured separately from the hallway space and classified as assigned storage (outlined in green). Their square footage is not included within the hallway total.
3. The rooms are still measured from the interior face and are not affected by the built-in lockers (outlined in blue).

Wall Measurement

Wall thicknesses were typically measured using the 25-foot tape measure at door jambs or windows where a partial section view of the wall could be obtained. These measurements were recorded and rounded to the nearest ½-inch. If the width could not be measured using one of the measuring devices, the following typical wall thicknesses should be considered:

- Exposed, single-wythe masonry walls
  - Concrete masonry unit (CMU) block is 8-inches thick
  - Typical fascia brick is 4-inches thick
  - If framing and drywall are present on the interior add 2.5-inches
- Exposed, double-wythe masonry walls
  - Concrete masonry unit (CMU) block is 18-inches thick
  - Typical fascia brick is 10-inches thick
  - If framing and drywall are present on the interior add 2.5-inches
- Framed wall with drywall on the interior and siding, stucco, or EIFS on the exterior are 6 to 8 inches thick.
- Framed wall with drywall on both sides are typically 5.5-inches thick.

Perimeter Measurement

The perimeter of the facility was typically measured using the 100-foot tape measure and/or Disto. The team would work their way around the building measuring the overall length of each of the perimeter walls. Wing walls or architectural bump-outs that did not contain any interior space that could be occupied were not measured (Refer to Figure 7 for clarification).

Figure 7: Exterior Perimeter Wing Wall

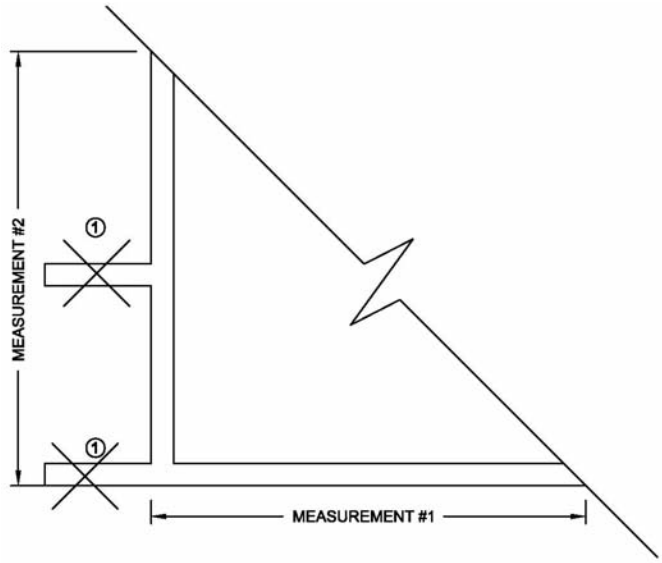

1. Exterior wing walls were not measured or shown on drawings.

Basement Measurement

The guideline followed for basement levels was if the assessor could enter the space and stand up fully and safely (typically greater than 5-feet high), the space would be measured. This included mechanical tunnels and full-height crawlspaces. Spaces that required the assessor to crawl into were not measured as part of this survey and were not included in the overall square footage total. If spaces were labeled or appeared as "Confined Access" or "Asbestos Containing" they were not entered or measured.

Type and Use Classifications

Spaces were given a type and use classification based upon what was observed within the space at the time of the survey. If an escort was present and the type and use was unclear, the team would ask for input from that individual. Each space would be assigned a type and use from the predetermined list stored in the field spreadsheet.

Illumination Level Measurement

The light meter was placed on a flat surface (generally at desk level) as close to the center of the room as possible taking care to make sure there was nothing around the meter that would reflect or dim the light. The measurement was recorded in foot-candles and then compared to the standard value for the space that was stored in the field spreadsheet. If the recorded measurement was not greater than the standard value, three additional measurements were obtained; two at the front of the room and one at the back.

Appendix E

One-Page Facility Summaries